SHP-478 - 7/1/2021

MISSOURI

Motor Vehicle Safety Inspection

Regulations Manual

Department of Public Safety
Missouri State Highway Patrol - Driver and Vehicle Safety Division
Motor Vehicle Inspection Section
1510 East Elm Street
Post Office Box 568
Jefferson City, MO 65101
www.statepatrol.dps.mo.gov

Effective Date: July 1, 2021

Motor Vehicle Inspection Tips

Your job is critical to roadway safety. Please remain committed to proper and complete safety inspections.

All current manuals, bulletins or other rules issued by the superintendent of the Missouri State Highway Patrol must be read and initialed by the station owner or operator and each inspector/mechanic, and must be available at all times for ready reference.

Motor vehicle safety inspection stations cannot refuse the performance of a motor vehicle safety inspection during normal business hours for <u>any</u> cause except when the approved inside inspection area is in use for the completion of another motor vehicle safety inspection. *Refusal for lack of a title or registration documents is prohibited.*

The **<u>Missouri School Bus Inspection Regulations Manual</u>** should always be consulted for procedures to be followed in the safety inspection of a school bus.

Motor vehicle inspection forms, manuals, brochures and frequently asked questions are available at:

<u>https://apps.mshp.dps.mo.gov/MSHPWeb/PatrolDivisions/DVSD/MVI/index.html</u>

For further assistance or inquiries, please contact your assigned MVI personnel.

MOTOR VEHICLE SAFETY INSPECTION REGULATIONS
TABLE OF CONTENTS

Definitions (11 CSR 50-2.010) 1
Minimum Inspection Station Requirements (11 CSR 50-2.020) 2
Inspection Station Classification (11 CSR 50-2.030) 4
Private Inspection Stations (11 CSR 50-2.040) 5
Inspection Station Permits (11 CSR 50-2.050) 5
Display of Permits, Signs and Poster (11 CSR 50-2.060) 6
Hours of Operation (11 CSR 50-2.070) 6
Licensing of Inspector/Mechanics (11 CSR 50-2.080) 6
Inspection Station Operational Requirements (11 CSR 50-2.090) 7
Requisition of Inspection Stickers, Authorities and Decals (11 CSR 50-2.100) 8
Issuance of Inspection Stickers and Decals (11 CSR 50-2.110) 9
MVI-2 Form (11 CSR 50-2.120) 10
Violation of Laws or Rules Penalty (11 CSR 50-2.130) 12
Sale of Vehicles for Junk, Salvage or Rebuilding (11 CSR 50-2.140) 13
Brake Performance (11 CSR 50-2.150) 14
Brake Components (11 CSR 50-2.160) 15
Air and Vacuum Brake Systems (11 CSR 50-2.170) 17
Lighting Equipment (11 CSR 50-2.180) 22
Signaling Devices (11 CSR 50-2.190) 24
Steering Mechanisms (11 CSR 50-2.200) 24
Steering Mechanisms - Visual Aids 29
Horn (11 CSR 50-2.210) 31
Mirrors (11 CSR 50-2.220) 31
Windshield Wipers (11 CSR 50-2.230) 31
Tires (11 CSR 50-2.240) 32
Wheels (11 CSR 50-2.250) 32
Exhaust System (11 CSR 50-2.260) 32
Glazing (Glass) (11 CSR 50-2.270) 33
Air Pollution Control Devices (11 CSR 50-2.280) 34
Fuel System (11 CSR 50-2.290)) 37
Mud Flaps (11 CSR 50-2.300) 37
Seat Belts (11 CSR 50-2.310) 38
Bumpers (11 CSR 50-2.311) 39
Autocycle Inspection (11 CSR 50-2.335) 41
Motorcycle Inspection (11 CSR 50-2.330) 45
Vehicle Identification Number & Odometer Reading Verification (11 CSR 50-2.440) 48

APPENDIX

Chart - Millimeters to Inches/Inches to Millimeters Conversion 50
Chart - Common Fractions Reduced to Decimals 51
Contact Numbers - Troop MVI Offices 52
Motor Vehicle Inspection Checklist 54
Motorcycle Inspection Checklist 55

Definitions (11 CSR 50.2.010)

The following words and terms as used in these rules shall have the following meaning:

Approval certificate: The white copy of the written document which is given to the vehicle owner and which shows that the vehicle meets the inspection requirements

Autocycle: A three-wheeled motor vehicle in which the drivers and passengers ride in a partially or completely enclosed non-straddle seating area, that is designed to be controlled with a steering wheel and foot pedals, and that has met applicable Department of Transportation National Highway Safety Administration requirements or federal motorcycle safety standards.

Commercial motor vehicle: A motor vehicle designed or regularly used for carrying freight and merchandise or more than eight (8) passengers

Decal*:* A gummed decalcomania that is attached to a motorcycle on an exterior location other than the windshield when the vehicle meets the inspection requirements

Inspector/mechanic*:* Any automotive mechanic issued a permit by the superintendent of the Missouri State Highway Patrol to conduct inspections

Motorcycle*:* A motor vehicle operated on two (2) wheels

Motor tricycle: A motor vehicle operated on three (3) wheels, including a motorcycle while operated with any conveyance, temporary or otherwise, requiring the use of a third wheel. A motor tricycle shall not be included in the definition of all-terrain vehicle.

Motor vehicle: Any self-propelled vehicle not operated exclusively upon tracks, except farm tractors

Proper Function of Lights, Lamps and Signaling Devices: Lights, lamps, and signaling devices consisting of multiple light emitting diodes shall be deemed to function properly if no less than seventy five percent (75%) of the light emitting diodes of such light, lamp, or signaling device is operational.

Rejection notice: A document which is given to the vehicle owner indicating the vehicle does not meet the inspection requirements

Revocation*:* The rescinding of an inspection permit for a period of not less than one (1) year

School bus: Any motor vehicle used solely to transport students to and from school or to transport students to or from any place for educational purposes.

- A Type "A" school bus is a van conversion or bus constructed utilizing a cutaway front-section vehicle with a left side driver's door. The entrance door is behind the front wheels. This definition includes two (2) classifications: Type A1, with a Gross Vehicle Weight Rating (GVWR) less than or equal to ten thousand pounds (10,000 lbs.); and Type A2, with a GVWR of greater than ten thousand pounds (10,000 lbs.).

- A Type “B” school bus is constructed utilizing a stripped chassis. The entrance door is behind the front wheels. This definition includes two (2) classifications: Type B1, with a GVWR less than or equal to ten thousand pounds (10,000 lbs.); and Type B2, with a GVWR greater than ten thousand pounds (10,000 lbs.).

- A Type “C” school bus is constructed utilizing a chassis with a hood and fender assembly. The entrance door is behind the front wheels.

- A Type “D” school bus is constructed utilizing a stripped chassis. The entrance door is ahead of the front wheels

Sticker: A gummed label or decalcomania that is attached to the windshield of a motor vehicle when the vehicle meets the inspection requirements

Suspension*:* The temporary removal of an inspection permit for a period of less than one (1) year, but not less than thirty (30) days

Trailer*:* Any vehicle without motor power designed for carrying property or passengers on its own structure and for being drawn by self-propelled vehicles, except those running exclusively on tracks, including a semitrailer or vehicle of the trailer type designed and used in conjunction with a self-propelled vehicle that a considerable part of its own weight rests upon and is carried by the towing vehicle

Truck-tractor*:* Any self-propelled motor vehicle designed and used primarily for drawing other vehicles and not constructed to carry a load other than a part of the weight of the vehicle and load being drawn

Vehicle owner: Any person, firm, corporation or association who holds the legal title to a vehicle or in the event a vehicle is the subject of an agreement for the conditional sale or lease thereof with the right of purchase upon performance of the conditions stated in the agreement and with an immediate right of possession vested in the conditional vendee or lessee, or in the event a mortgagor of a vehicle is entitled to possession, then such conditional vendee or lessee or mortgagor shall be deemed the owner for the purpose of this chapter. The term "vehicle owner" also shall include any person renting or leasing a vehicle and having exclusive use of the vehicle for a period longer than thirty (30) days, the holder of a lessee title or the agent or personal representative of an owner as defined in this rule.

Minimum Inspection Station Requirements (11 CSR 50-2.020)

I. Premises

Each inspection station must have an inspection area within an enclosed building of sufficient length, width and height to accommodate the type of vehicle being inspected. Class A and D stations are required to accommodate a commercial vehicle. Class B stations must accommodate a standard full-size passenger vehicle. Class C stations are required to have sufficient length and width to inspect full-size motorcycles.

- In addition to an inside area, an outside inspection area may be approved for-
    - the inspection of commercial vehicles at Class B stations; and
    - the inspection of motor tricycles and autocycles at Class C stations.
- The area shall be substantially level and constructed of hard material, such as asphalt or concrete. It shall be a part of and adjacent to the official vehicle inspection station.

The station must be in compliance with applicable city, county and state regulations relating to zoning, merchant licensing, fictitious name and retail sales tax number.

The inside inspection area shall be sufficiently lighted, adequately heated and properly ventilated.

The floor must be substantially level and constructed of a hard material. Dirt, gravel and bituminous surface or sagging wood floors will not be accepted. The floor must be kept clean, free from excessive dirt, grease and loose material.

If the station has only one (1) inspection area, no major mechanical repair work shall be permitted in the inspection area during normal business hours.

Public inspection stations shall be located on an all-weather road and be readily accessible to the motoring public without entering the station premises by the opening of gates or other similar barriers.

Operational changes, except the addition or deletion of inspector/mechanics, unless the deletion of an inspector/mechanic results in no inspector/mechanic for the station, affecting the current station application must be submitted to the Missouri State Highway Patrol immediately.

II. Equipment

All inspection stations, except Class C, must have the following equipment which must be arranged and located at or near the inside inspection area:

- Brake lining gauge. A gauge will be required to determine the remaining thickness in fractions of an inch of both bonded and riveted linings
- Brake pad gauge. Some type of gauging device to accurately measure the remaining thickness of the brake pad in fractions of an inch while the pad is within the caliper assembly
- Ball joint gauge. A ball joint gauge to accurately measure any looseness in the load-carrying ball joint. The gauge must be adapted to measure vertical (up and down) and horizontal (side-to-side) movement
- Lift or jack. A lift or jack, capable of hoisting a vehicle properly to check ball joints, suspension linkage and wheel play. If a lift is used, it must be the type which allows the front wheels to be suspended by lifting under the outer extremity of a motor vehicle's lower control arm, cross member or frame
- Scraper. A scraper to remove old stickers
- Measuring device. Yardstick or steel tape preferred

- Punch. An open face paper punch with a round die to validate inspection stickers and decals
- Tire tread depth gauge. A tire tread depth gauge which is graduated into one-thirty-second inch (1/32") increments must be part of the equipment at inspection stations that inspect school buses
- String and nut. A one-eighth inch (1/8") drawstring over thirty inches (30") in length with a one-half inch (1/2") hex nut attached to one (1) end to check handrails is required if the station will be inspecting school buses

Class C inspection stations must have the following equipment:

- Brake pad gauge. Some type of gauging device to accurately measure the remaining thickness of the brake pad in fractions of an inch while the pad is within the caliper assembly
- Ball joint gauge. A ball joint gauge to accurately measure any looseness in the load-carrying ball joint. The gauge must be adapted to measure vertical (up and down) and horizontal (side-to-side) movement
- A jack or lifting mechanism capable of lifting the vehicle so at least one wheel is off the ground
- Measuring device
- Punch

III. Personnel

Minimum of one (1) inspector/mechanic, except for a short period of time due to illness or annual vacation.

Each inspection station will designate, on the station application, a person in charge of inspections who is responsible for the daily operation of the station insuring that complete and proper inspections are being performed. The employee to be in charge of inspections will be present at the inspection station during the station's hours of inspection, except for short periods of time, such as illness or annual vacation.

Inspection Station Classification (11 CSR 50-2.030)

Public inspection stations shall be classified as follows:

- Class A stations are authorized to inspect all vehicles.
- Class B stations are authorized to inspect, at a minimum, standard full-size passenger vehicles and pickups.
    - Class B stations are authorized to inspect larger vehicles, including commercial vehicles that can fit inside their inspection bay.
    - Class B stations are eligible to apply for authorization to inspection commercial vehicles at an outdoor location approved by the Missouri State Highway Patrol.
    - Class B stations are eligible to apply for authorization to inspect motorcycles, motor tricycles, and autocycles.

- Class C stations are only authorized to inspect motorcycles, motor tricycles, and autocycles.
    - Class C stations are eligible to apply for authorization to inspect motor tricycles and autocycles at an outdoor location approved by the Missouri State Highway Patrol.
- Class D stations are only authorized to inspect commercial motor vehicles.

Private Inspection Stations (11 CSR 50-2.040)

A private official vehicle inspection station permit will be issued to any association, person, partnership, corporation, subsidiary corporation or governmental entity, provided its facilities, equipment and personnel meet the requirements prescribed for a public inspection station.

- A private inspection station shall inspect only vehicles registered or to be registered, titled or to be titled in the name of the person or organization described on the application for a permit or which are maintained under a written maintenance agreement of one (1)-year duration.
- Before any vehicles which are maintained under a written maintenance agreement can be inspected, a copy of the maintenance agreement must accompany the application for a private station permit or be on file at the Motor Vehicle Inspection Division, Jefferson City, Missouri.
- All inspection rules, standards and procedures shall apply to private inspection stations.

Inspection Station Permits (11 CSR 50-2.050)

Any person, firm, corporation, partnership or governmental entity requesting appointment as an official inspection station shall submit a completed inspection station application.

The fee for a permit to operate a public or private inspection station is ten dollars ($10) per year. **No fee shall be charged for a permit issued to a governmental entity.** A permit is valid for one (1) year from the date of issue. Each permit shall be renewed on or before the expiration date. A completed inspection station application shall be accompanied by a check or money order made payable to the director of revenue and forwarded to the Missouri State Highway Patrol, Motor Vehicle Inspection, PO Box 568, Jefferson City, MO 65102-0568. Under no circumstances will cash be accepted for the permit fee.

No permit issued to an inspection station may be transferred or used at any other location. Any change in ownership or location shall cancel the station permit. The Missouri State Highway Patrol must be notified immediately when a change of ownership or location occurs or when a station discontinues operation.

When an inspection station permit has been suspended or revoked, or when a station discontinues operation, all inspection supplies must be released on demand to a motor vehicle inspector or a member of the Missouri State Highway Patrol. The failure to account for all inspection supplies will be sufficient cause not to reinstate a station permit.

No motor vehicle inspection station license will be issued to a spouse, child(ren), son/daughter-in-law, employee or any person having an interest in the business for the privilege to conduct inspections at the same location or in close proximity to the location of a station whose license is under suspension or revocation, unless the applicant can provide reasonable assurance that the licensee under suspension or revocation will not be employed, manage, assist in the station operation or otherwise benefit financially from the operation of the business in any way.

Display of Permits, Signs and Poster (11 CSR 50-2.060)

The station permit must be framed under clean glass and displayed in a conspicuous location discernible to those presenting vehicles for inspection.

The inspector/mechanic permit must be framed under clean glass and displayed in a conspicuous location discernible to those presenting vehicles for inspection.

The sign designating the station as a public inspection station shall be displayed in a location visible to the traveling public. This is not required for private stations.

The poster, MVI-6, must be framed under clean glass and displayed in a conspicuous location discernible to those presenting vehicles for inspection. This is not required for private stations.

Hours of Operation (11 CSR 50-2.070)

The normal business hours of every public inspection station shall be at least eight (8) continuous hours per day, five (5) days per week.

Inspection station operators, inspector/mechanics, or both, are obligated to conduct inspections and reinspections of vehicles during normal business hours. A vehicle shall be inspected within a two (2)-hour period after being presented unless other vehicles are being inspected. A reinspection must begin within one (1) hour when a vehicle is presented during the twenty (20) consecutive-day period excluding Saturdays, Sundays and state holidays allowed by law for reinspections.

Licensing of Inspector/Mechanics (11 CSR 50-2.080)

Every person requesting appointment as an inspector/mechanic shall submit a completed inspector/mechanic application.

An inspector/mechanic must have at least one (1) year's practical experience as an automotive mechanic or must have completed a course of vocational instruction in automotive mechanics from

a generally recognized educational institution, either public or private. All inspector/mechanics must be at least seventeen (17) years of age and able to read the written instructions.

An inspector/mechanic must be thoroughly familiar with the contents of the inspection manual and must have passed a written test indicating knowledge of its contents. An inspector/mechanic will also be required to demonstrate practical knowledge by inspecting a vehicle. A minimum grade of eighty (80) is required to pass each written examination, practical examination or reexamination.

An inspector/mechanic permit will be issued without charge. Permits are valid for a period of three (3) years from the date of issuance or until suspended or revoked by the superintendent of the Missouri State Highway Patrol. An inspector/mechanic whose permit has been suspended or revoked shall be required to pass a reexamination before the permit will be reinstated.

An inspector/mechanic may be reexamined at any time, and if s/he fails the reexamination or refuses to be reexamined, the permit issued to him/her shall be suspended. If an inspector/mechanic fails a reexamination, s/he cannot again be tested until a period of thirty (30) days has elapsed.

A permit may be renewed before the expiration date or sixty (60) days after expiration without a reexamination. An inspector/mechanic does not have authority to conduct any inspections during the sixty (60)-day grace period unless the permit has been properly renewed.

Two (2) types of inspector/mechanic permits are available:

1) a permit that restricts the inspector/mechanic to motorcycle, motor tricycle, and autocycle inspections only; and
2) a permit that authorizes the inspector/mechanic to safety inspect motor vehicles.

Inspection Station Operational Requirements (11 CSR 50-2.090)

The inspection fee, including the issuance of the certificate of inspection, sticker or decal, may be charged for each inspection as established by state statute. Every inspection must be a complete inspection before a vehicle may be approved or rejected. Once an inspection has begun it shall not be terminated until a complete and proper inspection has been made. Every item of vehicular equipment that is required to be inspected shall be inspected according to prescribed procedures before an approval certificate, rejection notice or inspection sticker or decal is issued. A proper and complete inspection consists of a physical inspection of the vehicle and the immediate completion and issuance of all inspection certificates at the time the vehicle is inspected.

All inspections must be conducted at the inspection station in the approved inside inspection area, except that large commercial vehicles, motor tricycles, and autocycles unable to fit within the approved inside inspection area may be inspected in an approved outside inspection area during good weather only.

The inspection of a vehicle shall be made only by an individual who has a valid inspector/mechanic permit, except a person without a valid permit may assist by operating the lights and signaling devices.

No person without a valid inspector/mechanic permit shall issue an approval certificate, a rejection notice, an inspection sticker or decal.

No owner, operator or employee of an inspection station shall furnish, loan, give or sell an approval certificate, inspection sticker or decal to any person except those entitled to receive it.

All current manuals, bulletins or other rules issued by the superintendent of the Missouri State Highway Patrol must be read and initialed by the station owner or operator and each inspector/mechanic, and must be available at all times for ready reference.

When an inspector/mechanic or a person authorized to purchase inspection stickers or decals resigns or is dismissed, the station owner or operator must report these changes when contacted by a motor vehicle inspector or a member of the Missouri State Highway Patrol.

If the highway patrol is asked to settle a difference of opinion between the vehicle owner and an inspection station owner or an inspector/mechanic concerning the inspection standards and procedures, the decisions of the highway patrol concerning inspection standards and procedures will be final.

Up-to-date inspection records shall be available during normal business hours for examination by any motor vehicle inspector or member of the Missouri State Highway Patrol.

Inspection stickers, decals, and MVI-2s (see 11 CSR 50-2.120) will be kept under lock to prevent them from being lost, damaged or stolen. If stickers, decals, or MVI-2s are lost, damaged or stolen, they shall be reported immediately to the Missouri State Highway Patrol.

Inspection station operators are permitted to advertise as official inspection stations.

Requisition of Inspection Stickers, Authorities, and Decals (11 CSR 50-2.100)

Inspection stickers will be used on the windshield of passenger and commercial motor vehicles. Inspection stickers will be sold only in complete books of twenty (20) stickers at a cost of thirty dollars ($30) per book. These stickers are valid for any one (1) of the calendar years shown on the sticker.

> *In lieu of inspection stickers, safety inspection authorities, for use with Gateway Vehicle Inspection Program (GVIP) analyzers, will be sold at a cost of one dollar and fifty cents ($1.50) each.*
>
> *Emission inspection authorities, for use with Gateway Vehicle Inspection Program (GVIP) analyzers, will be sold at a cost of two dollars and fifty cents ($2.50) each.*

Inspection decals will be used for motorcycle and autocycle inspections. Inspection decals will be sold only in complete books of twenty (20) decals at a cost of thirty dollars ($30) per book. These decals are valid for any one (1) of the calendar years shown on the decal.

All stations will keep a sufficient number of inspection stickers and/or decals on hand to meet their needs. Stations will be limited to one (1) requisition per month, allowing for sufficient time delay to prevent stations from depleting their stock of required supplies.

> *Public safety inspection stations shall purchase a minimum of five (5) books of inspection stickers and/or decals per combined order. Stations performing one hundred (100) or fewer inspections in the previous calendar year shall be exempt from this required minimum order.*
>
> *Public safety and emission inspection stations with Gateway Vehicle Inspection Program (GVIP) analyzers shall purchase a combined minimum of not less than one hundred (100) safety inspection authorities or emission inspection authorities.*

The Requisition For MVI Supplies (SHP-455) will be used when ordering both stickers or decals. The Requisition for Gateway Vehicle Inspection Program (GVIP) Supplies (SHP-453) will be used by safety and emission stations with GVIP analyzers when ordering safety inspection authorities, emission inspection authorities or decals. Requisitions must be accompanied by a check or money order made payable to the Director of Revenue, in the correct amount for the order. The requisition and payment must be mailed to the Missouri State Highway Patrol, Motor Vehicle Inspection Division, P.O. Box 568, Jefferson City, MO 65102. If a personal check is returned for any reason because of nonpayment, personal checks will no longer be accepted from that station. Stations that submit a check which is returned for nonpayment are subject to administrative action, including suspension and revocation, and criminal prosecution. Cash will not be accepted under any circumstances. Orders for stickers and decals will be shipped to the station's address as listed on the station application or most recent amendment. **No fee is charged for inspection stickers, authorities or decals issued to governmental entities.**

Motor vehicle safety inspection stickers, motorcycle/autocycle inspection decals, safety inspection authorities or emissions inspection authorities may be ordered online by utilizing the Missouri State Highway Patrol website. **Only public or private stations may submit online orders.** All online orders require payment by electronic check or credit card.

Inspection stations may exchange unused expired inspection stickers and decals for the same number of current issue. A request to exchange stickers must be accompanied by a Return Of Expired Stickers/Decals Form (SHP-466) properly completed with the numbers of the stickers/decals being returned recorded in the appropriate locations. The stickers or decals must be submitted for exchange no later than April 30 of the calendar year following their expiration. Stickers may be traded for decals and vice versa. A station may be sent portions rather than full books. Exchange stickers and decals will be shipped separately from other orders.

Issuance of Inspection Stickers and Decals (11 CSR 50-2.110)

An inspection sticker or decal shall be issued immediately following an inspection or reinspection if the vehicle meets the inspection requirements. The sticker or decal shall immediately be properly affixed to the vehicle by the inspector/mechanic who performed the inspection or reinspection.

When an inspection sticker is issued, the inspector/mechanic shall validate the sticker by punching the month and the year that the inspection was performed and by legibly writing the information

asked for on the reverse side of the inspection sticker. Previous inspection stickers affixed to the windshield shall be removed. The inspector/mechanic shall affix the current inspection sticker on the inside of the vehicle's windshield in the lower left-hand corner. On motor vehicles not equipped with a windshield, the inspector/mechanic shall issue a properly validated inspection decal and affix it to the vehicle's dash or steering column.

Location for placement of decals shall be as follows:

When an inspection decal is issued for a motorcycle, it shall be affixed in an upright position on the left side of the steering fork sleeve at a visible location near the slider tube. When such location is not available, the decal shall be affixed in an upright position to the frame in a visible location on the front left side of the motorcycle.

When an inspection decal is issued for an autocycle, it shall be affixed in an upright position to the left front corner of a glass windshield. If any autocycle is not equipped with a glass windshield, the decal will be affixed in an upright position at a visible location on the left front frame or on the driver’s side roll bar.

Stations which do not punch the correct month and year issue inspection sticker or decal shall be required to remove the sticker or decal from the vehicle and affix a properly validated inspection sticker or decal to the owner's vehicle without charge.

Stations will issue inspection stickers or decals from only one (1) book at a time, starting with their lowest numbered book.

All covers from used books of both stickers and decals will be retained by the inspection station. Inspection stickers or decals issued to an inspection station can be used only by that station.

MVI-2 Form (11 CSR 50-2.120)

The MVI-2 form will be used as an approval certificate, rejection notice and station record. It shall be completed and signed by the inspector/mechanic who inspected the vehicle. This form will be issued to an inspection station by number without charge and can be used only by the station to which issued. A station owner shall be accountable for each set. This form shall be used in every instance when a vehicle is presented for inspection, and no part of the form shall be filled out until the vehicle has been presented for inspection. All applicable blanks or spaces on the form shall be completely and accurately filled out in a legible manner. The inspector/mechanic shall obtain the identification number from the vehicle and accurately record the number on the MVI-2 form in the space allotted. If a vehicle does not have an identification number, the inspector/mechanic shall write the word “None” on the form in the space provided. A station will issue approval certificates or rejection notices from one (1) book of MVI-2s at a time, twenty (20) sets to a book, using their lowest numbered book.

Approval of Vehicle

- If each item of equipment required to be inspected meets the inspection requirements, an inspection sticker or decal will be issued and the inspector/mechanic shall record the number on the MVI-2 form in the space provided.
- The first sheet of the MVI-2 form (white copy) shall be given to the vehicle owner or operator as an approval certificate. An approval certificate will not be issued, under any circumstances, without the issuance of an inspection sticker or decal.
- No inspection sticker number or decal number shall be recorded on the MVI-2 form until the time a complete and proper inspection has been made and the vehicle described meets the minimum inspection standards established by rule; nor shall any signature of an inspector/mechanic be recorded until the vehicle has been completely and properly inspected.

Rejection of Vehicle

- If an item of equipment or any of its components does not meet the minimum inspection standards, the vehicle shall be rejected and the item or component shall be written under "Defective Part" in the space provided. In addition, the proper code for the defective item shall be determined from the code chart printed on the inside cover of the MVI-2 form and the code letter shall be recorded in the space provided. If an item is rejected for which a specific tolerance or measurement is listed, the measurement shall be recorded on the MVI-2 form.
- If a load-carrying ball joint is rejected because of movement in excess of prescribed tolerances, the measured movement shall be recorded. It should also be shown whether the measurement of the rejected ball joint is vertical or horizontal movement.
- The vehicle owner must be informed that s/he may repair the defective parts him/herself or have them repaired at any place of his/her choice and s/he shall have the right to remove the vehicle to a place for needed repairs. The inspector/mechanic shall sign the MVI-2 form in the space provided.
- Before any repairs are made by the inspection station, the vehicle owner shall be provided with a written estimate of the total cost of the repairs and the vehicle owner must authorize the station to make the repairs by signing the repair authorization in the space provided on the MVI-2 form.
- If the vehicle is removed from the inspection station for needed repairs, the second sheet of the MVI-2 form (yellow copy) shall be given to the vehicle owner as a rejection notice. The first sheet (white copy) and the third sheet (pink copy) will be filed with the station's yellow copies which are filed by consecutive control number.

- When a vehicle is returned for reinspection after repairs are made, the owner should present his/her rejection notice (yellow copy). The white and pink copies of the MVI-2 form having control numbers that correspond with the owner's rejection notice will be obtained from the station's files. A reinspection will consist of only those items of equipment or components that were originally rejected. If the vehicle is approved, an inspection sticker or decal will be issued. The inspector/mechanic who made the reinspection shall sign the approval certificate and record his/her inspector/mechanic number and the number of the inspection sticker or decal in the spaces provided. The approval certificate (white copy) then shall be given to the vehicle owner. The yellow copy will be filed by control number.
- If the rejected vehicle is returned for a reinspection within twenty (20) consecutive days, excluding Saturdays, Sundays and state holidays, no additional inspection fee can be charged for one (1) reinspection.

Inspection Station Record

- The third sheet of the MVI-2 form (pink copy) will be filed by consecutive issue of sticker or decal number.
- Twenty (20) pink copies, which are filed by consecutive issue of sticker or decal number, shall be filed between the front and back cover of the used sticker or decal book which contained corresponding sticker or decal numbers. These pink copies and used covers will be kept by the inspection station for twenty-four (24) months from the date the inspection sticker or decal number was issued, at which time they may be destroyed.
- Inspection records (yellow and pink copies) shall be given to any member of the Missouri State Highway Patrol or motor vehicle inspector.
- All MVI-2 forms which are voided will be marked Void. All voided sets will be filed with the station's yellow copies that are filed by consecutive control number

If a vehicle owner loses an approval certificate, the vehicle owner may obtain, within sixty (60) calendar days, a replacement approval certificate at no charge from the inspection station which made the original inspection. Information for a replacement approval certificate will be obtained from the inspection station's records. The words "Replacement Certificate" will be written across the front. The first sheet (original) will be given to the vehicle owner. The second copy (yellow) will be filed by consecutive control number. The third copy (pink) will be filed by sticker or decal number.

Violation of Laws or Rules Penalty (11 CSR 50-2.130)

All inspection station operators and inspector/mechanics shall comply with the motor vehicle inspection law and the motor vehicle inspection rules. All inspections shall be conducted in accordance with the motor vehicle inspection rules. Failure to comply with the motor vehicle inspection law or the motor vehicle inspection rules will subject the inspection station operator and inspector/mechanic to a warning, suspension or revocation of inspection permits and arrest.

Before any inspection station permit or inspector/mechanic permit is suspended or revoked by the superintendent of the Missouri State Highway Patrol, the holder will be given the opportunity to have an administrative hearing as provided by law.

Sale of Vehicles for Junk, Salvage or Rebuilding (11 CSR 50-2.140)

When a vehicle is sold for junk, salvage or for rebuilding, the purchaser must give to the seller an affidavit signed before a notary public stating that the vehicle is being purchased for that purpose. A copy of the affidavit will be given to the buyer. The affidavit shall be written in the prescribed manner and shall contain the following information:

SHP-498A 05/12

MISSOURI STATE HIGHWAY PATROL

JUNK, SALVAGE, OR REBUILDING AFFIDAVIT

Year	Make	Model	Vehicle Identification Number
Mileage	Name of Seller		

I understand the vehicle listed above which I am buying from the seller has not been inspected and is in an unsafe mechanical condition. The vehicle is being purchased for junk, salvage, or rebuilding. I understand the vehicle cannot be operated in its present condition; therefore, I agree the vehicle will either be towed or hauled from the place of purchase. I further understand the vehicle cannot be registered and operated upon a public highway until I have the vehicle inspected. If any defects are discovered in the vehicle's brakes, lights, turn signals, steering mechanism, horn, mirrors, windshield wipers, tires, wheels, exhaust system, glass, or fuel system, during the inspection, they must be repaired at my own expense.

I certify I have read the above statement, or the above statement has been read to me, and that I fully understand the conditions under which the vehicle is being purchased.

Purchaser's Printed Name	Purchaser's Signature
Address	

NOTE: The sale of this vehicle in its present condition without an approval certificate and its operation upon the streets and highways of Missouri from the place of purchase, is a violation of Section 307.380, RSMo., and may subject the seller to penalties pursuant to Sections 307.380 and 307.390, RSMo., 1986.

FOR NOTARY PUBLIC USE ONLY

Subscribed and sworn to before me this _____ (Day) day of _____ (Month), _____ (Year)

Notary Public _____

County of _____, State of Missouri.

My commission expires _____.

(A copy of this affidavit must be given to the seller.)

Brake Performance (11 CSR 50-2.150)

A brake performance test shall be performed by an inspector/mechanic on all single unit motor vehicles equipped with mechanical, hydraulic or power assisted hydraulic service brakes. The brake performance test may be conducted by using any one (1) of the following procedures: a decelerometer test, a drive and stop test, a brake testing machine or a dynamometer test. The selected test shall be conducted on the inspection station premises.

Decelerometer Test. Mount and level decelerometer on vehicle. At a speed of five to twenty miles per hour (5–20 mph) apply service brake firmly. Observe decelerometer reading.

Reject vehicle if:

- The vehicle is unable to develop deceleration equal to or greater than that listed for its classification as prescribed in Table I.

Drive and Stop Test. The inspector/mechanic shall operate the vehicle at a speed of five to twenty (5—20) mph and apply the service brakes firmly.

Reject vehicle if:

- The vehicle's brakes fail to function or if the vehicle pulls significantly to either side.

Brake Testing Machine. Drive vehicle onto brake testing machine. Apply brakes firmly at a speed from four to eight (4–8) mph without wheel lock-up. If a computerized brake testing machine is utilized, a copy of the results will be provided to the vehicle owner.

Reject vehicle if:

- The vehicle is not capable of developing evaluated braking force equal to or greater than that shown for its classification as prescribed in Table I. At least three (3) tests should be made before a vehicle is rejected
- Any wheel fails to indicate braking action
- The reading on any one (1) wheel is less than seventy-five percent (75%) of the reading on the other wheel on the same axle
- The braking force of both wheels on one (1) axle is more than seventy-five percent (75%) of the total force of all the wheels.

Dynamometer Test. Test in accordance with the manufacturer's instructions.

Table 1

Classification of Vehicles	Braking Force as a Percentage of Gross Vehicle or Combination	Deceleration in Feet Per Second
Passenger vehicles with a seating capacity of 10 people or less including driver, not having a manufacturer's gross vehicle weight rating	52.8%	17
Single unit vehicles with a manufacturer's gross vehicle weight rating of 10,000 pounds or less	43.5%	14
Single unit vehicle with a manufacturer's gross weight rating of more than 10,000 pounds	43.5%	14

Brake Components (11 CSR 50-2.160)

Hydraulic System

Pedal Reserve. With the vehicle stopped, apply moderate foot force on the brake pedal for at least one (1) minute and observe if the pedal moves slowly toward toe board.

Reject vehicle if:

- Brake pedal moves slowly toward the toe board, indicating fluid leakage, while pedal pressure is maintained for one (1) minute
- Less than one-fifth (1/5) of the total available pedal travel remains
- Less than two-fifths (2/5) of total available pedal travel remains on a school bus
- The brake warning device or light comes on when the brake pedal is depressed. Do not inspect the anti-lock braking system warning device or light

Power Reserve. Determine if system is operating by first stopping engine, then depress brake pedal several times to destroy all vacuum in system. Depress pedal with a moderate foot force. While maintaining this force on the pedal, start engine and observe if pedal falls slightly when engine starts. Hydroboost system must have accumulator pressure for two (2) complete brake applications and should have return pressure against foot. If vehicle is equipped with electrohydraulic booster brake system, stop engine, turn ignition to the "on" position, depress brake pedal and observe if electric pump, buzzer and pump indicator lights operate. Inspect school buses manufactured after March 1, 1987, for audible or visible brake warning signals, or both.

Reject vehicle if:

- Service brake pedal does not fall slightly as engine is started while pressure is maintained on pedal

- There is audible leakage in the vacuum system
- Hydroboost brake system does not have two (2) brake applications available
- Electric pump, buzzer and pump indicator lights fail to function on vehicles equipped with electrohydraulic booster brake system
- School bus manufactured after March 1, 1987, is not equipped with proper audible or visible brake warning signals, or both, or signals fail to function.

Master Cylinder. Inspect master cylinder for proper fluid, fluid level, fluid leakage and play in push rod. Power master-type systems should have the brake pedal depressed ten to forty (10–40) times or until the pedal is firm, with the ignition off, before inspecting fluid level. Master cylinder reservoirs with distinctly marked minimum levels should be inspected with the cap on. Observe the fluid level to ensure it complies with the manufacturer's suggested minimum level. The cap will then be removed to inspect the gasket for fluid contamination, swelling, cracking, misshape or tears.

Reject vehicle if:

- Master cylinder contains fluid other than brake fluid, if master cylinder leaks, if fluid level is more than three-fourths inch (3/4") below top of reservoir
- Vehicle with disc brakes and dual hydraulic systems show the brake fluid level measuring more than one-half inch (1/2") below the top of the reservoir on master cylinders that have no manufacturer's minimum markings
- Master cylinder brake fluid level is below the manufacturer's minimum fluid level as marked on the reservoir
- There is no play in the push rod with brake pedal not depressed
- Master cylinder gasket is torn or misshaped.

Drums, Discs and Internal Brake Components. At least one (1) front or one (1) rear wheel and drum must be removed on each passenger vehicle, one-half (1/2) ton and three-quarter (3/4) ton pickup trucks, or similar type vehicles not equipped with dual rear wheels. Only the wheel must be removed on vehicles equipped with disc brakes. Identification marks shall be made on the wheel and lug before removal so the wheel can be remounted in the same position to insure wheel balance. On drum brake systems, a new cotter pin must always be used when remounting a wheel and drum. The removal of a wheel and/or drum is not required if the brake performance test has been administered using an approved computerized brake testing machine. When an approved computerized brake testing machine is used, and no wheel is removed, the inspector shall mark through the space on the MVI-2 form provided for "Brake Inspected" with the letters "CBTM." When removal of a wheel is required, a wheel appearing to leak brake fluid or grease, shall be the wheel removed to inspect for contamination. Wheels on four (4)-wheel drive vehicles equipped exclusively with drum-type brakes are not required to be removed.

Inspect drums, discs, calipers, linings, pads, wheel cylinders, hoses, lines and other internal brake components.

Reject vehicle if:

- There are substantial cracks on the friction surface extending to open edge of drum or to the edge of a disc
- A brake drum or disc has external cracks
- Friction surface of disc brake pads, rotor, brake linings or brake drum is contaminated with oil, grease or brake fluid
- A brake lining is worn into the friction surface of the brake drum where the brake drum cannot be removed after loosening the adjusting screw (backing off of the self-adjusting mechanism)
- Thinnest point of bonded lining is less than two-thirty-seconds inch (2/32")
- Rivets are loose or missing or if lining or pad is not firmly attached to shoe
- Riveted lining is worn to less than two-thirty-seconds inch (2/32") above any rivet head at thinnest point
- Wire is visible on the friction surface of wire-backed linings
- Lining is broken or cracked, does not include heat cracks
- A primary or secondary shoe and lining is improperly installed
- Bonded pads are worn at any one (1) point to less than two-thirty-seconds inch (2/32")
- Riveted pads are worn at any one (1) point to less than six-thirty-seconds inch (6/32"). If unable to determine if pads are riveted or bonded, pads will be considered to be bonded pads
- A wheel cylinder or caliper leaks a sufficient amount of hydraulic brake fluid to cause droplets. Do not mistake assembly fluid for hydraulic fluid
- Hoses or tubing leak or are cracked, chafed, flattened, restricted, bubbled, improperly installed or insecurely fastened
- Mechanical parts are missing, broken or badly worn
- There is excessive friction in brake pedal, linkage or other components
- Pedal levers are improperly positioned or misaligned
- Brake components are misaligned, binding, obstructed or will not function properly.

11 CSR 50-2.170 Air and Vacuum Brake Systems

Vehicles With a Vacuum Brake System

On vehicles equipped with a vacuum brake system, the engine should be allowed to run for one (1) minute to build vacuum. Inspect system for collapsed, broken, badly chafed and improperly supported hoses, tubes and loose or broken hose clamps. Depress brake pedal with moderate foot force. While maintaining this force on the pedal, start engine and observe if pedal falls slightly when engine starts. Build full vacuum, then shut off engine and make as many full brake applications as possible. On vehicles with low vacuum indicators, build full vacuum. Shut off engine and reduce vacuum by making a series of moderate brake applications. A flashing or buzzing signal should function when vacuum reaches eight inches (8") mercury.

Reject vehicle if:

- Hoses or tubes are collapsed, leaking, broken, badly chafed, improperly supported or loose because of broken clamps
- Service brake pedal does not fall slightly as engine is started while pressure is maintained on pedal
- Vacuum reserve is insufficient to make one (1) full application after engine shutoff
- Indicator fails to function when system is reduced to eight inches (8") mercury.

Vehicles With an Air Brake System

The following will apply to all motor vehicles equipped by the manufacturer with an air brake system. Open all drain cocks in system until pressure gauge reads zero (0). Close drain cocks and run engine at fast idle. Record time to raise air pressure from fifty to ninety pounds per square inch (50–90 psi) on gauge. Observe gauge pressure at which light or buzzer on low pressure indicator goes out or off. Continue running engine and observe gauge pressure when governor cuts out. With engine idling, make a series of brake applications and observe gauge pressure when governor cuts in. With fully charged system, stop engine and record pressure drop in psi per minute with brakes fully applied. With fully charged system, stop engine and record pressure drop in psi per minute with brakes released. Make a series of brake applications until low pressure warning signal operates. With fully charged system, stop engine and make one (1) full brake application. Measure drop in reservoir pressure.

Inspect all air hoses and connections. Inspect lines for contact with frame, axles or exhaust system. Inspect for leaks that may be heard from valves, diaphragms and piston cups. Inspect air safety valve. Inspect condition of compressor drive belts.

Reject vehicle if:

- Time required to build pressure from fifty to ninety (50–90) psi at fast idle is more than five (5) minutes
- Low pressure warning fails to function when pressure is lowered to between fifty to seventy (50–70) psi
- Governor cut-out pressure is higher than one hundred twenty-five (125) psi
- Governor cut-in pressure is lower than eighty (80) psi
- Leakage in psi per minute exceeds three (3) psi for single vehicles and four (4) psi for combination of two (2) vehicles with brakes applied
- Leakage in psi per minute exceeds two (2) psi for single vehicles and three (3) psi for combination of two (2) vehicles with brakes released
- Air reserve is not sufficient to permit one (1) full brake application after engine is stopped
- Reservoir pressure is lowered more than twenty percent (20%) of first reading
- Leaks, breaks, crimps or cracks in the air hoses, tubes or connections are present
- Lines are being rubbed by moving parts or are touching the exhaust system
- Leaks in valves, diaphragms or piston cups can be heard
- Air safety valve does not operate
- Compressor drive belts are badly worn or loose

Air Brakes Adjustment

On vehicles equipped with cam brakes, mark each brake chamber push rod at the face of the brake chamber with the brakes released. Apply the air brakes fully, minimum air pressure eighty-five (85) psi, and measure the distance the push rod travels from the face of the chamber to the mark previously made when the brakes were released. This measurement is the push-rod stroke (Illustrated in Figure 1)

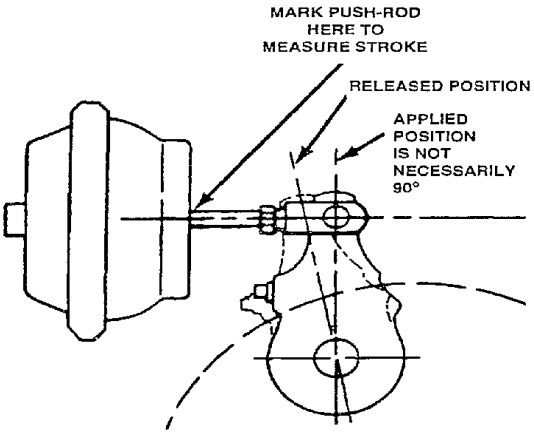

MEASURING THE CAM BRAKE ADJUSTMENT

FIGURE 1

Reject vehicle if:

Push-rod travel exceeds the maximum stroke listed in Table 1

-TABLE 1-

CLAMP TYPE BRAKE CHAMBER DATA		
TYPE	OUTSIDE DIAMETER	BRAKE ADJUSTMENT LIMIT
6	4-1/2	1-1/4
9	5-1/4	1-3/8
12	5-11/16	1-3/8
16	6-3/8	1-3/4
20	6-25/32	1-3/4
24	7-7/32	1-3/4
30	8-3/32	2
36	9	2-1/4
**********		
LONG STROKE CLAMP TYPE CHAMBER DATA		
TYPE	OUTSIDE DIAMETER	BRAKE ADJUSTMENT LIMIT
16	6-3/8	2.0
20	6-25/32	2.0
24	7-7/32	2.0
24*	7-7/32	2.5
30	8-3/32	2.5
** For 3" maximum stroke type 24 chambers*		
**********		
TIE ROD STYLE PISTON BRAKE CHAMBER DATA		
TYPE	OUTSIDE DIAMETER	BRAKE ADJUSTMENT LIMIT
30	6-1/2 (165mm)	2.5 (64 mm)
**********		
BOLT TYPE BRAKE CHAMBER DATA		
TYPE	OUTSIDE DIAMETER	BRAKE ADJUSTMENT LIMIT
A	6-15/16	1-3/8
B	9-3/16	1-3/4
C	8-1/16	1-3/4
D	5-1/4	1-3/4
E	6-3/16	1-3/8
F	11	1-3/82-1/4
G	9-7/8	2
ROTOCHAMBER DATA		
TYPE	OUTSIDE DIAMETER	BRAKE ADJUSTMENT LIMIT
9	4-9/32	1-1/2
12	4-13/16	1-1/2
16	5-13/32	2
20	5-15/16	2
24	6-13/32	2
30	7-1/16	2-1/4
36	7-5/8	2-3/4
50	8-7/8	3
**********		
DD-3 BRAKE CHAMBER DATA		
TYPE	OUTSIDE DIAMETER	BRAKE ADJUSTMENT LIMIT
30	8-1/8	2-1/4

Commercial Vehicles - Emergency and Parking Brakes

Every vehicle equipped exclusively with an air brake system and every commercial motor vehicle equipped with a vacuum, air over hydraulic, hydroboost or electrohydraulic booster brake system shall be equipped with parking brakes adequate to hold the vehicle or combination on any grade upon which it is operated under any condition of loading, on a surface free from ice and snow. The parking brake shall be capable of being applied by the driver's muscular effort or by spring action. Their operation may be assisted by the service brakes or other source of power, provided that failure of the service brakes or other power assisting mechanisms will not prevent the parking brakes from being applied. The parking brake shall be so designed that when once applied it shall remain in the applied position despite exhaustion of any source of energy or leakage of any kind.

Emergency system. Apply the emergency operating control fully or release air pressure from the spring brake actuators using the manual control valve. Observe locking and holding feature of the actuating mechanism. Observe operating mechanisms for bottoming before brakes are fully applied. Observe if spring brakes apply when control valve is manually operated. Inspect for worn, missing or defective cotter pins, springs, rods, yokes, couplings or anchor pins and cables. Observe if mechanism releases brakes when release control is operated.

Reject vehicle if:

- Operating mechanisms fail to hold brakes in applied position without manual effort
- Operating mechanism bottoms before brakes are fully applied
- Spring brakes fail to apply when control valve is operated
- Mechanical parts are missing, broken or badly worn or pull cables are badly worn, stretched, frayed or not operating freely
- Brakes do not fully release when release control is operated.

Lighting Equipment (11 CSR 50-2.180)

Headlights. Every motor vehicle, other than a motorcycle, shall be equipped with one (1) of the following types of headlighting systems which shall exhibit light substantially white in color (See Figure 1).

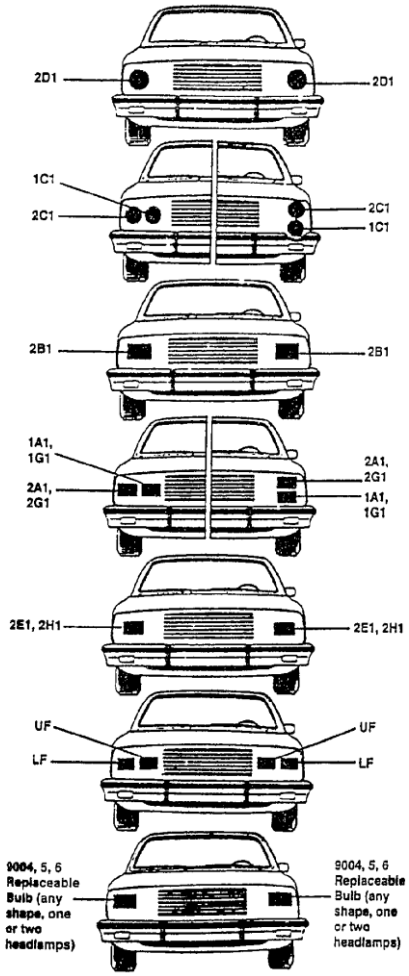

FIGURE 1

Approved Headlamp Systems.

- 177-mm diameter, 2D1 both upper and lower beam.
- 146-mm diameter, 1C1 upper beam, 2C1 lower beam.
- 142 X 200-mm rectangular, 2B1 both upper and lower beam.
- 100 X 165-mm rectangular, 1A1 and 1G1 upper beam, 2A1 and 2G1 lower beam and 2E1 and 2H1 both upper and lower beam.
- 92 X 150-mm rectangular, UF upper beam, LF lower beam.
- Replacement bulb headlamp

    - 9004, 9007 replacement bulb, both upper and lower beam.

    - 9005 and 9006 together, upper and lower beam.
    - 9005 and 9006 in separate headlamps, upper and lower beam, respectively.

- Headlights shall be mounted one (1) or two (2) on each side, depending upon application, at the same level.

Beam Indicator. Every motor vehicle equipped with multiple beam headlights shall be equipped with a beam indicator which shall be lighted only when the high beam is in use.

Taillights. All motor vehicles, except motorcycles, shall be equipped with at least two (2) taillights, mounted on the rear of the vehicle at the same level with at least one (1) on each side, not less than fifteen inches (15") or more than seventy-two inches (72") above the ground. These lights shall exhibit a plainly visible red light.

Reflectors. Every 1966 and later model vehicle, except a motorcycle, must be equipped with two (2) red reflectors. A reflector may be in combination with the taillight and must be mounted on the rear, one (1) on each side, at a height not to exceed sixty inches (60") nor less than fifteen inches (15") above the surface upon which the vehicle stands.

Inspect Vehicles for Proper Lighting Equipment. Do not inspect side marker lights, parking lights, four (4)-way flashers, backup lights, interior lights, license plate light or clearance lights.

Reject vehicle if:

- Not equipped with the required lights or reflector
- A light or reflector is obstructed
- A required light fails to function properly
- A light, reflector or electrical switch is not securely mounted
- A light or reflector shows color contrary to law
- Wiring or electrical connectors are defective
- A lens is missing, incorrectly installed, repaired with tape or broken to the extent that moisture or contamination could enter the reflective area or light socket
- High beam indicator does not function properly
- Physical damage is present that would obviously cause a headlight beam to be either above or below horizontal or to the left or right of vertical
- A taillight or reflector is not mounted in the prescribed area

Signaling Devices (11 CSR 50-2.190)

Turn Signals. Turn signals installed by the manufacturer or their equivalent in number, size, and intensity shall be in operating condition. The front signal lights may be white or amber and may be in combination with the parking lights. The rear signal lights may be red or amber, except when in combination with a taillight the lens must be red.

Stoplights. Stoplights installed by the manufacturer or their equivalent in number, size, and intensity shall be in operating condition. Stoplights may be red or amber, except when in combination with the taillight the stoplight must be red. Stoplights must operate when the service brake is applied.

Every vehicle manufactured after January 1, 1954, must be equipped with mechanical or electrical turn signals and a stoplight if the distance from the center of the top of the steering post to the--

- Left outside limit of the body, cab or load exceeds twenty-four inches (24"); and
- Rear limit of the body or load exceeds fourteen feet (14'). The limit of fourteen feet (14') shall apply to both single and vehicle combinations.

Inspect Vehicle for Proper Signaling Devices. The headlights must be on with the engine running, when inspecting the operation of the signaling devices and stoplights. Move turn signal lever up and down and observe function of turn signal lights.

Reject vehicle if:

- Not equipped with the required signaling devices
- A signaling device is obstructed
- A required signaling device fails to function properly. Do not reject if turn signal fails to self-cancel or will function properly by manually holding the lever in the engaged position
- A signaling device or electrical switch is not securely mounted
- A light shows color contrary to law
- Wiring or electrical connectors are defective
- A lens is missing, incorrectly installed, repaired with tape or broken to the extent that moisture or contamination could enter the reflective area or light socket.

Steering Mechanisms (11 CSR 50-2.200)

Steering Wheel Play.

An inspection for steering wheel play will consist of checking steering sector for looseness and binding condition. If vehicle is equipped with power steering, the engine must be running and the fluid level and belt tension must be adequate before testing. Turn steering wheel through a full right and left turn. If equipped, inspect energy absorbing steering column.

Inspect steering and reject vehicle if:

- Steering gear binds or jams other than at wheel stops
- There is more than two inches (2") of free movement in steering wheels up to and including eighteen inches (18") in diameter or more than three inches (3") in steering wheels over eighteen inches (18") in diameter
- Power steering belt slips, is frayed, if serpentine power steering belt has sections missing, if fluid level is below manufacturer's minimum fluid level, if hoses or connections are leaking, if a power steering unit has been disconnected and has not been converted to manual steering or if any component part is missing, loose, malfunctions, or leaks sufficient fluid to cause droplets
- Energy absorbing steering column is collapsed or partially collapsed
- Steering wheel and steering column are not properly secured
- Steering gear box or steering rack assembly is not securely mounted

Front and Rear Wheel Play

An inspection for front and rear wheel play, which includes steering linkage, pitman arm, idler arm, stabilizer bar(s), connections, link(s), wheel bearings, tie rod ends and adjusting sleeves, can only be made by putting the ball joints under load. To load ball joints, the vehicle must be hoisted:

- Under the frame if the spring or torsion bar is on the lower control
- Under lower control arm, close to ball joint, if spring or torsion bar is on upper control arm
- From the underside of axle if the vehicle is equipped with kingpins or Twin I-Beams with ball joints

Inspect front and rear wheel bearings by grasping the tire by both top and bottom and rocking it in and out. To verify that any looseness detected is in the wheel bearings, notice the movement between the brake drum or disc and the backing plate or splash shield.

Inspect front wheels, king pin (spindle bolts) and idler arm for play. On vehicles with power steering, the engine must be running. Eliminate all wheel bearing movement by first applying the service brake. Grasp front and rear of tire and attempt to turn assembly right and left. Then grasp top and bottom of tire and attempt to rock it in and out. Observe movement at extreme front and rear, both at top and bottom, of tire.

Inspect all steering linkage, pitman arm, stabilizer bar(s), connections, link(s), tie rods and adjusting sleeves for locked joints and looseness by working them up and down and back and forth by hand.

Inspect condition of all upper and lower control arms, pivot shafts, pivot shaft mountings, radius arms, and all bushings.

Reject vehicle if:

- Wheel bearing looseness in an adjustable wheel bearing allows relative movement between drum and backing plate (disc and splash shield) more than one-eighth inch (1/8") measured at the outer circumference of the tire for vehicles ten thousand pounds (10,000 lbs.) Gross Vehicle Weight Rating (GVWR) or less or one-quarter inch (1/4") for vehicles more than ten thousand pounds (10,000 lbs.) GVWR.
- A wheel bearing is broken, or falls apart when a wheel is removed to inspect a brake.
- Front wheel movement is in excess of one-fourth inch (1/4") for wheels sixteen inches (16") or less, three-eighths inch (3/8") for wheels over sixteen inches (16") to and including eighteen inches (18") and one-half inch (1/2") for wheels over eighteen inches (18"). (An idler arm or king pin must meet this criteria before being rejected.)
- Excessive vertical (up and down) or lateral (side) movement is evident in any of the steering linkage sockets, tapered studs are loose in their mounting holes, any movable joints are locked, any adjusting sleeves are loose, or any joints are not secured with cotter pins or other devices.
- A sealed wheel bearing hub assembly exceeds the manufacturer-recommended wear specifications.
- A control arm or radius arm is badly bent or broken, or if a pivot shaft or a pivot shaft mounting or any control arm, radius arm, pivot shaft bushing is badly worn or missing.
- Stabilizer bar(s), links, connections are badly worn, missing, loose or broken.

Springs and Shock Absorbers

A visual examination must be made of all springs, torsion bars, shock absorbers, bushings, shackles and “U” bolts with the vehicle on a hoist or jack.

Reject vehicle if:

- Springs or torsion bars are loose, broken or spring pieces or torsion bars are missing
- Spring shackles or “U” bolts are worn, missing, or loose
- A shock absorber is missing, disconnected, not securely attached, broken, or if rubber bushings or mounting bolts are worn-out or missing.

Ball Joints

An inspection for ball joint wear can only be made when the joints are unloaded, except those ball joints having a wear indicator. An inspection of a ball joint which has a wear indicator must be made while the ball joint is under load with the weight of the vehicle on its wheels. To unload ball joints, the vehicle must be hoisted:

- Under lower control arm if spring or torsion bar is on lower control arm. The lower ball joint is the load-carrying ball joint and the upper ball joint is the nonload-carrying ball joint.
- Under frame if spring or torsion bar is on upper control arm. The upper ball joint is the load-carrying ball joint and the lower ball joint is the nonload-carrying ball joint.

In checking the condition of an unloaded ball joint, a ball joint gauge need not be used if the inspector is absolutely certain that the ball joint movement does not exceed the prescribed tolerances. A vehicle will not be rejected unless the vertical (up and down) or horizontal (side-to-side) movement in the load-carrying ball joint has been accurately measured by a ball joint gauge and the measurement exceeds the prescribed tolerances. A vehicle requiring a special tool or method to measure ball joint movement will not be rejected unless the ball joint is obviously dangerous. Inspector/mechanics will either contact the Motor Vehicle Inspection Division at the nearest troop headquarters or visit the Missouri State Highway Patrol website to obtain manufacturer's specifications on ball joints. If the ball joint movement exceeds the prescribed tolerances, the measured movement shall be listed with the defective part on the MVI-2 form (see 11 CSR 50-2.120).

Unless a dial indicator or a gauge of the type which screws into a grease fitting is used, it is recommended that the most accurate method of determining vertical (up and down) movement of the ball joint using a gauge which has a roller and pointer, is to remove the dust cup from the spindle and place the pointer rollers of the ball joint gauge on top of the spindle nut. In the event that the rollers of a particular brand gauge are too large to rest on top of the spindle nut, the rollers should then be positioned against the bottom of the spindle nut. To measure horizontal (side) movement, place rollers of gauge against tire sidewall and work wheel in and out.

Inspect ball joints with wear indicator. Wipe the grease fitting and boss free from dirt and grease. Observe if boss is flush or inside the cover surface.

Inspect ball joints without wear indicator by hoisting and unloading the ball joint. Position a pry bar under the front tire and wheel and with pressure sufficient only to lift the weight of the wheel assembly, move the wheel up and down and observe movement. Under no circumstances should there be more upward lifting force exerted than necessary to determine the actual movement of the ball joint stud within the housing. Grasp the tire and wheel assembly at the eleven (11) and five (5) o'clock positions. Work the wheel in and out to detect any looseness. Move hands to the one (1) and seven (7) o'clock positions and repeat.

Inspect ball joints. For ball joints on Twin I-Beam axles, eliminate all wheel bearing play by applying the service brake. Raise the vehicle by hoisting under the I-Beam axle beneath the spring. Grasp the lower edge of the tire and move the wheel in and out. While the wheel is being moved, observe the lower spindle arm and the lower part of the axle jaw. Grasp the upper edge of the tire and move the wheel in and out. While the wheel is being moved, observe the upper spindle arm and the lower part of the axle jaw. Movement of .031" (thirty-one thousandths inch) or greater between the lower or upper portion of the I-Beam and ball joint indicates that a measurement should be made at the circumference of the wheel adjacent to the ball joint that exhibits movement.

Reject vehicle if:

- The grease fitting boss on the wear indicator type ball joint is flush or inside the cover surface
- MacPherson Strut Suspension System has severely worn or missing thrust bearing or mounting bushings. If piston rod is bent or unit is not securely mounted to vehicle

- There is free play in any direction in a nonload-carrying ball joint, unless a manufacturer's ball joint tolerances indicate minimum allowable movement. If vertical (up and down) movement in a load-carrying ball joint exceeds prescribed tolerances
- Any joints are not secured with cotter pins or other devices, or if ball stud is loose in the mounting hole.

STEERING MECHANISMS - VISUAL AIDS

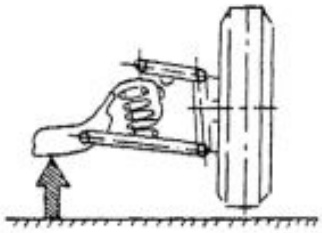

Figure 1

Inspection for wheel bearing adjustment, wheel play and steering linkage with spring on lower control arm

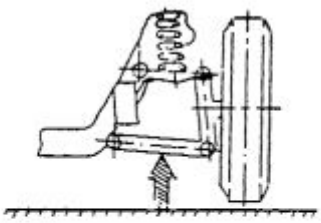

Figure 2

Inspection for wheel bearing adjustment, wheel play and steering linkage with spring on upper control arm.

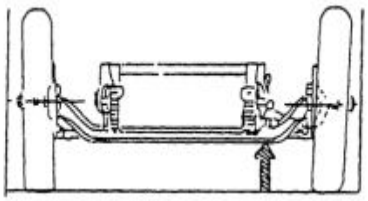

Figure 3

Inspection for wheel bearing adjustment, wheel/king pin (spindle bolt), and linkage play with front axle. ***(Raise until wheel clears one side at a time)***

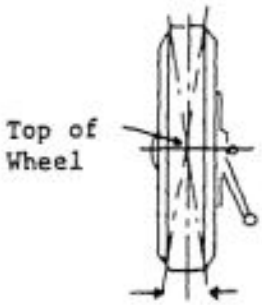

Figure 4

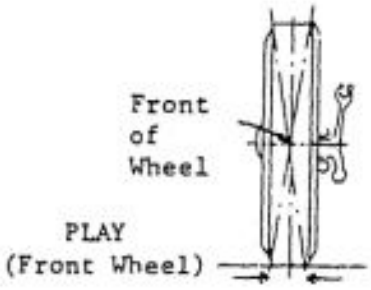

Figure 5

Wheel Play

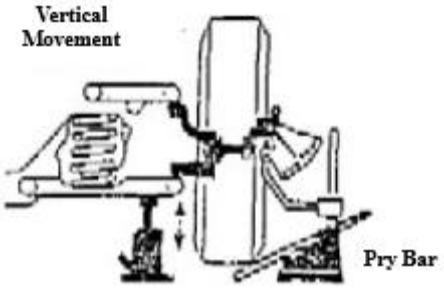

Figure 6

Inspection for ball joint wear with spring on lower control arm.

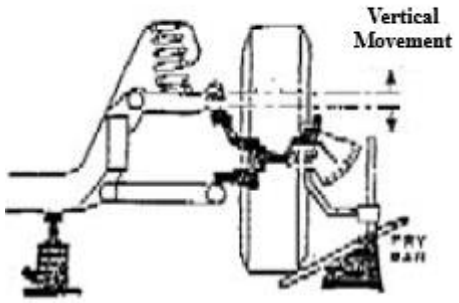

Figure 7

Inspection for ball joint wear with spring on upper control arm

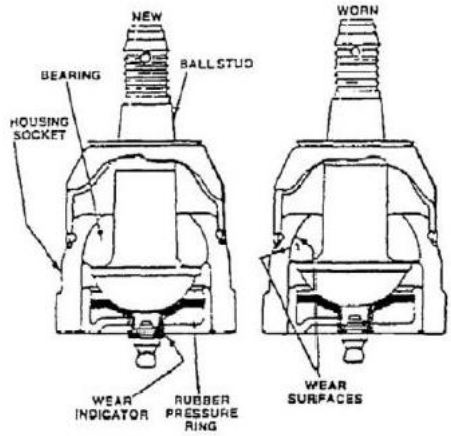

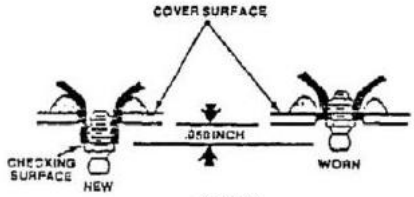

Figure 8

Ford Motor Company
Fairmont & Zephyr (1978-1983)
Mustang & Capri (1979-Present)
Lincoln & Mark (1980-Present)
Continental (1982-1987)
Granada (1981-1982)
LTD & Marquis (1983-Present)

Procedure: These models have a new wear-indicating single lower ball joint system. Support the vehicle in normal driving position, with both ball joints loaded. Inspect using same procedure as ball joints with wear indicators.

Reject Vehicle: If checking surface is inside the ball joint cover.

Figure 9

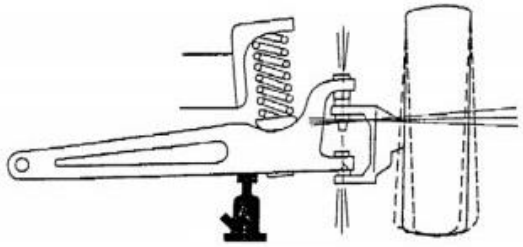

FIGURE 10

Twin I-Beam front axle equipped with ball joints

Horn (11 CSR 50-2.210)

Every motor vehicle shall be equipped with a horn directed forward, or whistle in good working order, capable of emitting a sound adequate in quantity and volume to give warning of the approach of the vehicle to other users of the highway and to pedestrians.

Reject vehicle if:

- Vehicle is not equipped with a horn
- Horn is not audible under normal conditions
- Horn button or switch is not firmly mounted providing a good ground, or if horn is actuated by grounding two (2) naked wires or a similar method
- Horn button or switch is not readily accessible from driver's position.

Mirrors (11 CSR 50-2.220)

All motor vehicles which are so constructed or loaded that the operator cannot see the road behind by looking back or around the side of the vehicle shall be equipped with either an inside or outside mirror, or both, that will reveal the road behind.

All motor vehicles which were equipped by the manufacturer with an inside mirror and all 1968 and later model vehicles manufactured with both an inside and a driver's side outside mirror, shall be equipped in like manner. Do not inspect passenger side outside mirrors.

Reject vehicle if:

- Forward vision is unsafely obstructed by mirror assembly
- Mirror does not provide a clear view of highway to rear because of cracks, discoloration or improper mounting
- Mirror is broken or has sharp edges exposed
- Mirror is very difficult to adjust or will not maintain a set adjustment
- There is no required mirror

Windshield Wipers (11 CSR 50-2.230)

All front windshield wipers as equipped by the manufacturer shall be in operating condition. Inspect for operation, damaged or torn rubber blades, and for proper contact of blades with windshield. Raise wiper arm slightly away from windshield and release.

Reject vehicle if:

- Windshield wipers fail to function
- Rubber wiping element is damaged or torn

- Part of blades or arms are missing or are severely damaged
- The blades fail to contact the windshield firmly.

Tires (11 CSR 50-2.240)

Inspect all tires except the spare tire for tread wear, knots, cuts, separations, mismatching of tire types and for tire markings such as “reject” or “for non-highway use.”

Reject vehicle if:

- A tire is worn at any location other than the wear indicator to the point where there is no tread configuration
- There is a localized worn spot that exposes the cord
- Tire has any cut or separation that exposes the cord when the tire is inflated or if the tire has any knots
- A vehicle has a radial and a nonradial tire on the same axle
- A tire is marked reject, rejected, not for highway use, farm use only, for nonhighway use, for race track use only, or marked with similar terms, or if determined beyond a reasonable doubt that these markings have been removed. This does not include tires labeled with the word blemish
- The tire size of any dual is mismatched by more than one-half inch (1/2") in height.

Wheels (11 CSR 50-2.250)

Inspect all wheels except the spare tire wheel for damage and the condition of any visible wheel bolts, nuts or lugs, or mismatching of hub assembly. Hub caps need not be removed to inspect wheel bolts, nuts or lugs except on the wheel which is removed for brake inspection.

Reject vehicle if:

- There are loose, missing or damaged wheel studs, bolts, nuts or lugs
- Rims and lock rings on the wheel of a commercial vehicle are mismatched
- Rims or lock rings are bent, sprung, cracked or otherwise damaged
- Stud holes are out-of-round
- There are cracks between the hand holes or stud holes of a disc wheel
- A casting is cracked or there is evidence of wear in the clamping area of a cast wheel
- A wheel and hub assembly are mismatched or if the lug holes and lug bolts are mismatched, which prohibits the tightening and proper seating of the lug nuts, or the hub flange fails to make full contact with the wheel pad

Exhaust System (11 CSR 50-2.260)

All motor vehicles shall be equipped with a properly attached exhaust pipe, muffler and tailpipe.

All items must be inspected with the motor running. Holes in the system made by the manufacturer for drainage are not cause for rejection. Do not block or place anything over the end of the tailpipe to check for leaks.

Reject vehicle if:

- A manifold, manifold gasket, flange gasket or a connection or any other component is loose or leaking
- Muffler, exhaust pipe, tailpipe or resonator has holes, leaking patches or seams (Patches made with an arc or acetylene weld are acceptable)
- Tailpipe end is pinched or broken off from rear support bracket
- Any part of the system is supported by wire, or if any component is not securely attached by supporting hardware, such as bolts, brackets, clamps or hangers
- Tailpipe is located so that a person may be burned on entering or leaving passenger compartment
- Any part of system passes through passenger compartment
- Tailpipe fails to discharge exhaust away from under passenger compartment of commercial motor vehicles
- Tailpipe fails to discharge exhaust from the rear or sides of the passenger and luggage compartment on passenger vehicles
- Vehicle has no muffler
- Tailpipe fails to discharge exhaust away from the sides or rear of a camper which is mounted on a motor vehicle and which is equipped with permanent cooking, heating and sleeping facilities
- A commercial vehicle has a tailpipe extending beneath the cargo area that leaks or is improperly supported

Glazing (Glass) (11 CSR 50-2.270)

All 1936 and later model motor vehicles which were originally equipped with glass must have approved safety glass in all doors, windows and windshields.

Automotive safety glass is marked with the manufacturer’s trademark and the words "American Standard" or the letters "AS" followed by a number indicating the position in which the glass may be used. Safety glass bearing the following identification may be used in the designated locations:

- AS1 anywhere in a motor vehicle
- AS2 anywhere except windshields
- AS3 or AS4 anywhere on school buses except windshields and side windows to immediate right and left of driver location
- AS3 and above is permitted at certain other specified locations, such as rear windows of trucks and convertibles

Types of Damage or Defect

- Outright breakage: Glass that is severely cracked, shattered or broken to expose sharp edges or missing pieces
- Distortion: A manufacturing defect or other defect that causes a distorted view
- Star break: Vented breaks with cracks radiating from point of impact

- Bull’s-eye and half moon: Nonvented circular or half-circular chips not dislodged from glass

Inspect glazing. The driver's vision area is that area within the normal swipe of the wiper blades above a line measured four inches (4") from the bottom of the windshield. In addition, inspect operation of window at driver’s left.

Reject vehicle if:

- Required glazing is not present or improper glazing materials are used
- Window at driver’s left cannot be readily opened to permit arm signals. (Do not reject if the vehicle is equipped with properly operating turn signals and stoplight)
- After-market vision reducing material or other conditions that obscure the driver’s vision is on the windshield
- The windshield has any cracks exceeding three inches (3") in length, within the driver's vision area
- The windshield has any unrepaired star breaks, bull’s-eyes, or half moons within the driver's vision area
- The windshield has any of the following that are more than two inches (2") in diameter at any area outside the driver's vision area: star breaks; bull's-eyes; or half moons
- The windshield has any distortion
- Outright breakage, missing pieces or any break exposing sharp edges is present at any location

Air Pollution Control Devices (11 CSR-2.280)

The inspection of air pollution control devices installed by the manufacturer will apply to 1968 and later model vehicles. This does not apply to diesel fuel vehicles or to vehicles operating exclusively on propane fuel or compressed gas. Vehicles converted with option to operate on compressed natural gas or propane are permitted to remove or modify the thermostatic air cleaner if the modifications performed meet United States Environmental Protection Agency Mobile Source Enforcement Memorandum Number 1A.

Effective July 1, 1992, all light-duty vehicles which are passenger vehicles with a Gross Vehicle Weight Rating (GVWR) below six thousand pounds (6,000 lbs.) and commercial vehicles with a GVWR below eight thousand five hundred pounds (8,500 lbs.), which receive a replacement engine, in regard to all emissions related parts, engine design parameters and engine calibrations, must comply with the certified configuration of the same or newer model year as the vehicle chassis.

Effective July 1, 1992, diesel powered vehicles may receive a replacement gasoline engine if the resulting engine-chassis configuration is equivalent to a certified configuration of the same model year or newer as the chassis and that chassis has been certified with a gasoline engine.

Effective July 1, 1992, heavy-duty vehicles which are passenger vehicles with a GVWR in excess of six thousand pounds (6,000 lbs.) and commercial vehicles with a GVWR in excess of eight thousand five hundred pounds (8,500 lbs.) may receive a replacement heavy-duty engine if the resulting vehicle is identical to a certified configuration of the same model year or newer. Under no circumstances may a heavy-duty engine ever be installed in a light-duty vehicle.

All 1968 and later model vehicles which received a replacement engine before July 1, 1992, must be equipped with all the air pollution control devices installed by the manufacturer on that particular engine.

Reject vehicle if:

- A replacement engine is not equivalent to the certified configuration of the engine-chassis
- Heavy-duty engine is used in a light-duty chassis.

Crankcase Ventilation

The ventilation system of the crankcase is commonly known as the positive crankcase ventilation (PCV) system. The engine should be warm and running at idle during inspection of the vent system.

Inspect plumbing connections for tightness and proper routing. Disconnect PCV valve from engine. Shake briskly and listen for a rattling sound. Place finger or thumb over end of valve and feel for vacuum suction.

Reject vehicle if:

- Plumbing is loose, broken, leaking or improperly routed
- No vacuum suction is present or valve does not rattle when shaken
- Any part of the system is missing or disconnected.

Air Injection System

The air injection system provides air to the exhaust manifold or catalytic converter. The system may or may not be equipped with an external air pump.

With engine stopped, inspect tension of air pump drive belt. Inspect hose connections at air pump, anti-backfire valve, check valves and air distribution manifolds.

Reject vehicle if:

- Belt slips or is frayed, if serpentine air pump belt has sections missing, if connections are loose, broken or leaking
- Any part of the injection system is missing or disconnected.

Engine Modification Type

An engine modification control system may be most easily identified as one without an air pump.

With engine stopped, inspect ignition wiring and vacuum hose connections.

Reject vehicle if:

- Wires or connections are loose, broken or leaking
- Any part of system is missing

Thermostatic Air Cleaner

The thermostatic air cleaner provides heated air to the carburetor during cold-engine operation. Inspect exhaust manifold shroud, preheat tube, vacuum diaphragm air cleaner and vacuum hoses.

Reject vehicle if:

- Connections are broken or disconnected
- Any part of system is missing

Spark Control System

The spark control system controls the advance and retard of the ignition spark. Inspect distributor, vacuum control valve, electrical control switch, wiring and vacuum hoses.

Reject vehicle if:

- Wiring or vacuum lines are broken, leaking or improperly routed
- Any part of the system is missing or bypassed.

Exhaust Gas Recirculation

The exhaust gas recirculation system supplies metered exhaust gas to the intake manifold. Inspect exhaust gas recirculation valve, temperature control valve and vacuum lines for proper routing.

Reject vehicle if:

- Components are broken, leaking or improperly routed
- Any part of system is missing.

Oxygen Sensor System

The oxygen sensor system measures the quantity of oxygen present in the exhaust system and supplies a signal to the carburetor or fuel injection system. Inspect oxygen sensor, located in exhaust manifold, temperature sensor, crankshaft sensor, microprocessor and wiring for proper routing.

Reject vehicle if:

- Any component is leaking, bypassed, modified or disconnected
- Any part of the system is missing.

Evaporative Emission System

The evaporative emission system restricts the release of fuel vapors by storing and metering the fuel vapors into the fuel intake system. Inspect the fuel tank vent line, overfill limiting valve, charcoal canister and purge line for proper mounting, leaks and proper routing.

Reject vehicle if:

- Components are leaking, improperly routed or mounted
- Any part of the system is missing or disconnected

Catalytic Converters

All 1981 and later model vehicles which were equipped by the manufacturer with a catalytic converter(s) must be equipped with the original equipment manufacturer converter(s) or United States Federal Environmental Protection Agency-approved replacement converters. These devices are located in the exhaust system, usually in front of the muffler. Inspect catalytic converter.

Reject vehicle if:

- Catalytic converter is bypassed or modified, is not securely attached, has leakage or is patched by other than an arc or acetylene weld
- A 1981 or later model vehicle is not equipped with a catalytic converter, as equipped by the manufacturer and as specified on the emission label

Fuel System (11 CSR 50-2.290)

Inspect the fuel tank(s), fuel lines and connections, filler tube and, if originally equipped, the filler tube cap.

Reject vehicle if:

- There is fuel leakage at any location
- Fuel tank is not securely attached
- Filler tube cap is missing or does not fit

Mud Flaps (11 CSR 50-2.300)

Trucks without rear fenders, which are intended to be registered for over twenty-four thousand pounds (24,000 lbs.) must be equipped with mud flaps for the rear wheels. Mud flaps must be wide enough to cover the full tread width of the tires. Mud flaps must be installed so that they extend

from the underside of the vehicle body in a vertical plane behind the wheels to within eight inches (8") of the ground, except that mud flaps on dump trucks must be installed so that they extend from the underside of the vehicle body in a vertical plane behind the wheels to within twelve inches (12") of the ground. Mud flaps must be sufficiently rigid to provide adequate protection when the vehicle is in motion.

Fenders installed by the manufacturer on all pickup trucks and other small trucks will be recognized. Curved fender wells, such as those on gasoline delivery trucks, van-type trucks and any other truck with a fender design that provides reasonable protection to the rear of the vehicle, will be exempt.

Reject vehicle if:

- Not equipped with required mud flaps
- Flap is not wide enough to cover the full tread width of the tire(s)
- Flap is not in a vertical plane extending to within twelve inches (12") of the ground for dump trucks
- Flap is not in a vertical plane extending to within eight inches (8") of the ground for all other vehicles that require mud flaps

Seat Belts (11 CSR 50-2.310)

Every four (4)-wheel passenger car, other than buses, manufactured after June 30, 1964, and designated as a 1965 or later model shall be equipped with at least two (2) sets of seat belts for the front seat of the vehicle. Pickup trucks manufactured on or after July 1, 1971, shall be equipped with at least two (2) sets of seat belts in the forward-most seating area of those vehicles. The inspector/mechanic must latch both sets of seat belts.

A seat belt is any strap, webbing or similar device including all necessary buckles, fasteners, motors, tracks and all hardware designed for installing that seat belt in a motor vehicle by the manufacturer or its equivalent. Seat belts are classified as:

- Type 1 seat belt assembly is a lap belt for pelvic restraint
- Type 2 seat belt assembly is a combination of pelvic and upper-torso restraint
- Type 2a shoulder belt is an upper-torso restraint for use in conjunction with a lap belt as a type 2 seat belt assembly. Some type 2a shoulder belts are motorized

Inspect Seat Belts. Do not reject vehicles that are equipped by the manufacturer with passive restraints consisting of only a shoulder belt without a lap belt.

Reject vehicle if:

- Any front seat is not equipped with a required seatbelt, equivalent to those installed by the manufacturer
- Front seat is covered so as to prohibit the use of required belts
- The seat in the driver's position is not capable of working in conjunction with a properly adjusted and fastened seatbelt

- The seat in the driver's position is not securely attached to the vehicle
- The seat in the driver's position cannot maintain a stable position
- A belt, buckle, bracket or motor is inoperative which prohibits designed function
- Belt webbing is frayed, split or torn

Bumpers (11 CSR 50-2.311)

Definitions.

Bumper: A device of at least four and one-half inches (4 1/2") in vertical height constructed of metal, wood or other durable material capable of absorbing shock and mounted on the front or rear of a motor vehicle. Each bumper must be made of a strength equal to a stock bumper.

Drop bumper: A bumper as which may be mounted not more than three inches (3") below the original manufacturer's mounting with heavy metal by bolting or welding to the motor vehicle frame.

Nonstock bumper: A bumper that is designed by other than a motor vehicle manufacturer.

Stock bumper: A bumper designed by a motor vehicle manufacturer, or an equivalent replacement.

The bumper shall be horizontally mounted on the vehicle centerline by bolting or welding to the vehicle frame as originally installed by the motor vehicle manufacturer. The bumper must extend in width to the originally manufactured tread width for the motor vehicle.

Measurement. Measurements shall be taken with the motor vehicle in an unloaded condition on a level surface with the tires inflated to the manufacturer's specifications. Measurements shall be taken from the surface on which the vehicle stands to the highest point of the bottom of the bumper (excluding any bumper attachments). If the vehicle is equipped with a nonstock-type bumper the measurement shall be taken from a point not more than five inches (5") below the centerline of the bumper mounting bracket. The bottom of the nonstock-type bumper, however, shall not be higher than the measurements allowable by state regulations.
Inspection Procedure. Inspect motor vehicle bumpers for proper bumper height, mounting, construction and presence of bumpers. (Pickup trucks and other commercial vehicles not equipped by the manufacturer with a rear bumper as standard equipment are not required to be equipped with a rear bumper.) Vehicle design will determine how a vehicle is classified. Passenger cars and station wagons which are designed and manufactured solely as passenger vehicles will be classified as motor vehicles, except commercial motor vehicles, and must comply with the twenty-two inch (22") maximum bumper height. Motor vehicles designed as multi-purpose or utility vehicles, including Broncos, Blazers, Suburbans, Jeeps, vans, mini-vans, pickups and mini-pickups, will be considered as commercial motor vehicles. The Gross Vehicle Weight Rating (GVWR) of these vehicles will determine the maximum bumper height as specified in the statute. The following chart depicts various bumper configurations and correct locations to measure:

MAXIMUM BUMPER HEIGHTS
(Not to Scale)

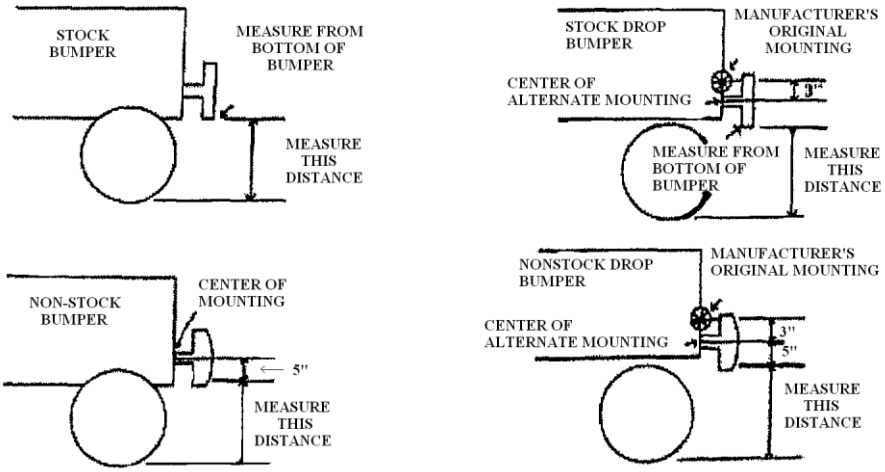

The following bumper heights apply to motor vehicles with a GVWR up through eleven thousand five hundred pounds (11,500 lbs.):

	Maximum Front Bumper Height	**Maximum Rear Bumper Height**
Motor Vehicles except commercial motor vehicles	22 inches	22 inches
Commercial Motor Vehicles (GVWR) 4500 lbs. and under	24 inches	26 inches
4501 lbs. - 7500 lbs.	27 inches	29 inches
7501 lbs. - 9000 lbs.	28 inches	30 inches
9001 lbs. - 11500 lbs.	29 inches	31 inches

A motor vehicle will not be rejected for improper bumper height if the motor vehicle was originally equipped by the manufacturer with a bumper that exceeds the stated heights or if the motor vehicle was originally equipped by the manufacturer with a bumper that fails to comply with subsection (1)(A).

Reject vehicle if:

- The bumper height exceeds the limit stated for the weight category of the motor vehicle
- Bumper is not constructed of metal, wood or other durable material and of equal strength to a stock bumper
- Bumper is improperly mounted
- Motor vehicle is not equipped with required bumper(s)

Autocycle Inspection (11 CSR 50-2.335)

This section of the inspection manual contains procedures which shall be followed when inspecting all autocycles, as defined in 304.005, RSMo.

The following components will be inspected on all autocycles, following established rules and regulations governing the safety inspection of motor vehicles:

- Brake Components *(Page 15)*
- Exhaust System *(Page 30)*
- Fuel System *(Page 35)*
- Horn *(Page 28)*
- Steering Mechanisms *(Page 24)*
- Tires *(Page 29)*
- Wheels *(Page 29)*
- Windshield Wipers *(Page 29)*

The following components will be inspected on all autocycles, following established rules and regulations governing the safety inspection of motorcycles:

- Air Pollution Control Devices *(Page 45)*
- Glazing (Glass) *(Page 47)*

The following components will be inspected on all autocycles, following the procedures and inspection criteria listed below:

Brake Performance

Brake efficiency shall be determined by operation of the vehicle on the inspection station premises. The vehicle may be operated by either the inspector/mechanic, or by the vehicle owner with the inspector/mechanic observing. Brakes must be installed and in operating condition on each wheel.

Drive and stop test. The autocycle shall be operated at a speed of five to twenty (5-20) mph. The service brakes will then be applied firmly.

Reject the autocycle if:

- The autocycle pulls significantly to either side;
- Any brake fails to indicate braking action;
- The autocycle is not equipped with brakes on each wheel; and
- The pedal fails to return to the fully-released position after application.

Lighting Equipment

Headlights

All headlights, as equipped by the manufacturer, shall function as designed. All headlights will exhibit light that is substantially white in color.

Reject the autocycle if:

- Any required headlight is absent;
- Any headlight does not exhibit light that is substantially white in color;
- Any headlight indicates reflector deterioration;
- Any headlight fails to function as designed; or
- Any headlight lens is missing, incorrectly installed, repaired with tape, or broken to the extent that moisture or contamination could enter the reflective area or light socket.

High Beam Indicator

Autocycles shall be equipped with a high beam indicator that displays only when high beams are in use.

Reject the autocycle if:

- The high beam indicator fails to display when high beams are in use; or
- The high beam indicator displays when high beams are not in use.

Taillights and Reflectors

Every autocycle shall be equipped with required taillights and reflectors. These lights shall exhibit a plainly visible red light.

- Autocycles manufactured with one (1) rear wheel shall be equipped with no less than one (1) red taillight and no less than one (1) red reflector.

- Autocycles manufactured with two (2) rear wheels shall be equipped with no less than two (2) red taillights and no less than two (2) red reflectors. Taillights and reflectors shall be mounted on the rear exterior of the autocycle at the same level, at an equal distance from the center of the vehicle.

A reflector may be part of the taillight assembly or may be a separate component.

Taillights shall be mounted no more than seventy-two inches (72”) nor less than fifteen inches (15”) above the ground.

Reflectors shall be mounted no more than sixty inches (60”) nor less than fifteen inches (15”) above the ground.

Reject the autocycle if:

- Not equipped with required taillights or reflectors;
- Any taillight or reflector is not red in color;
- A required taillight or reflector fails to function properly;

- A taillight, reflector or electrical switch is not securely mounted;
- A taillight or reflector shows color contrary to law;
- Wiring or electrical connectors are defective;
- A lens is missing, incorrectly installed, repaired with tape, or broken to the extent that moisture or contamination could enter the reflective area or light socket; or
- A taillight or reflector is not mounted in the prescribed area.

Mirrors

Every autocycle shall be equipped with an exterior mirror on the driver's side that reveals the road behind.

Every autocycle equipped by the manufacturer with an inside mirror shall be equipped in like manner.

Inspect all required mirrors.

Reject if:

- A mirror fails to provide a clear view of the highway to the rear because of cracks, discoloration or improper mounting;
- A mirror is broken or has sharp edges exposed;
- A mirror is very difficult to adjust or will not maintain a set adjustment;
- A required mirror is missing.

Roll Bars

If the autocycle was designed and equipped by the manufacturer with a roll bar, the roll bar must be present and inspected.

Reject the autocycle if:

- The required roll bar is missing
- The roll bar is not securely mounted, as designed by the manufacturer; or
- The roll bar is not in original manufacturer condition, due to damage or alteration that results in:
    - Sharp edges;
    - Tears;
    - Holes (not made by the manufacturer); or
    - Bending so that the roll bar is a different shape than as manufactured.

Seat Belts

Autocycles shall be equipped with seat belts at every seating location.

A seat belt is any strap, webbing or similar device, including all necessary buckles, fasteners, motors, tracks and all hardware designed for installing that seat belt in an autocycle by the manufacturer, or its equivalent.

Seat belts are classified as follows:

- Type 1 seat belt assembly is a lap belt for pelvic restraint.
- Type 2 seat belt assembly is a combination of pelvic and upper-torso restraint.
- Type 2a shoulder belt is an upper-torso restraint for use in conjunction with a lap belt as a type 2 seat belt assembly. Some type 2a shoulder belts are motorized.

Inspect seat belts at all seating locations for condition and function.

Reject the autocycle if:

- Not equipped with required seat belts;
- Any seat is covered so as to prohibit the use of required belts;
- A belt, buckle, bracket or motor is inoperative which prohibits designed function; or
- Belt webbing is frayed, split or torn.

Signaling Devices

Turn Signals. Turn signals installed by the manufacturer, or their equivalent in number, size and intensity, shall be in operating condition. The front signal lights may be white or amber and may be in combination with the parking lights. The rear signal lights may be red or amber, except when in combination with a taillight the lens must be red.

Stoplights. Stoplights installed by the manufacturer, or their equivalent in number, size and intensity, shall be in operating condition. All stoplights must be red and must operate when the service brake is applied.

- Autocycles manufactured with one (1) rear wheel shall be equipped with no less than one (1) red stoplight, mounted on the outside rear of the autocycle.

- Autocycles manufacturer with two (2) rear wheels shall be equipped with no less than two (2) red stoplights, mounted on the rear exterior of the autocycle at the same level, at an equal distance from the center of the vehicle.

Reject the autocycle if:

- Not equipped with the required signaling devices;
- A signaling device is obstructed;
- A required signaling device fails to function properly. Do not reject if the turn signal fails to self-cancel or if the turn signal functions properly by manually holding the lever in the engaged position;
- A signaling device or electrical switch is not securely mounted;
- A light shows any color contrary to law;
- Wiring or electrical connectors are defective; or
- A lens is missing, incorrectly installed, repaired with tape, or is broken to the extent that moisture or contamination could enter the reflective area or light socket.

Motorcycle Inspection (11 CSR 50-2.330)

This section of the inspection manual contains procedures which shall be followed when inspecting motorcycles and motor tricycles.

Brakes.

Brake efficiency shall be determined by operating the vehicle on the inspection station's premises. This test may be conducted either by the inspector/mechanic or by the vehicle owner with the inspector/mechanic observing. Brakes must be installed and in operating condition on each wheel if originally equipped by the manufacturer.

Apply each brake control separately while vehicle is in motion. Apply moderate force to brakes for one (1) minute. Inspect wheel and master cylinder for leakage, if equipped with hydraulic brakes. Inspect master cylinder for fluid level, if equipped with hydraulic brakes. Inspect brake hoses or tubing for broken, flattened or restricted sections and improper support. Inspect brake rods or cables for wear and proper adjustment.

Reject vehicle if:

- Any brake fails to indicate braking action
- Not equipped with required brakes
- Brake pedal height cannot be maintained for one (1) minute, leakage is indicated
- Less than one-third (1/3) of the pedal reserve remains
- Pedal fails to return to the fully released position after application
- Wheel or master cylinder leaks
- Fluid level in the master cylinder is below the level recommended by the manufacturer
- Brake hose is broken or restricted and if hose is not supported to prevent damage by rubbing with the frame or other components
- Brake cable is badly frayed or if rod, clevises and couplings are badly worn
- Any pins, springs or other mechanical parts are missing, defective or badly worn
- Brake rods or cables are not adjusted properly

Lighting Equipment.

Headlights. Every vehicle shall be equipped with at least one (1) and not more than two (2) headlights. A headlight shall exhibit light substantially white in color. A motorcycle equipped with a sidecar or other attachment shall be equipped with a light on the outside limit of the attachment capable of displaying a white light to the front.

Taillights and reflectors. Every vehicle shall be equipped with at least one (1) red taillight and at least one (1) red reflector. Any vehicle with two (2) rear wheels shall be equipped with at least two (2) red taillights and two (2) red reflectors. A reflector may be part of the taillight or it may be separate. The taillight shall be mounted at a height of not more than seventy-two inches (72") nor less than fifteen inches (15") above the ground. The reflector shall be mounted at a height not greater than sixty inches (60") nor less than fifteen inches (15") above the ground.
Signaling devices. If the vehicle is equipped with turn signals and a stoplight, all must operate.

Inspect lighting equipment, reflectors and signaling devices.

Reject vehicle if:

- Not equipped with required headlight, taillights or reflectors
- A headlight has reflector deterioration
- A lens is badly broken, missing, incorrectly installed or repaired with tape
- Any light fails to function properly
- Any light or reflector is not securely mounted or shows a color contrary to law
- Beam indicator or dimmer switch, if so equipped, fails to operate properly
- A taillight or reflector is not mounted in the prescribed area

Steering Mechanisms.

Inspect to determine the condition of the frame, fork, steering head bearing, handlebars and front and rear wheel tracking. Check wheel bearings by elevating and rotating each wheel. Inspect condition of grease retainers. If equipped by the manufacturer, actuate front and rear shock absorbers.

Reject vehicle if:

- Frame or fork is bent, broken or wheels are out of line where it affects the steering and control
- Loose, defective or worn components in steering head bearing
- Handlebars are loose, bent, broken or damaged where it affects proper steering
- Any portion of the handlebars extend over fifteen inches (15") in height above the normal riding position unless originally equipped by the motorcycle manufacturer
- Wheel bearings have excessive horizontal movement or, when rotated, unusual noise exists
- Grease retainer is defective
- A shock absorber is disconnected, broken, bent or missing

Tires and Wheels.

Inspect tires for tread wear, cord exposure, knots, cuts, tread separation and condition of wheel and rims.

Reject vehicle if:

- Any tire is worn at any one (1) point where there is no tread design across half of the tire tread
- Tire has an exposed cord, bulge or knot
- A tire is marked reject, rejected, not for highway use, farm use only, for non-highway use, for race track use only or marked with similar terms, or if determined beyond a reasonable doubt that these markings have been removed. This does not include tires labeled with the word blemish
- A wheel has any loose, missing or defective bolts, nuts, lugs or spokes

- A wheel is damaged or defective
- Any wheel wobbles more than three-sixteenths inch (3/16")

Horn.

Every vehicle shall be equipped with a horn, in good working order and capable of emitting a sound adequate in quantity and volume to give warning of the approach of the vehicle to other users of the highway.

Determine if horn is securely fastened, audible and if electrical connections are properly grounded.

Reject vehicle if:

- Vehicle is not equipped with a horn
- Horn is not audible under normal conditions
- Horn is not firmly mounted
- Horn is actuated by grounding two (2) naked wires or a similar method. Defective wiring or electrical connections.

Muffler and Exhaust System.

The motor shall be fitted with a properly attached muffler.

Inspect condition of muffler and exhaust pipe. If the vehicle is equipped with a dual exhaust system, both must be examined.

Inspect supporting hardware, attachments and brackets. Exhaust system must be securely attached at the cylinder head, manifold and to the frame at or near the place where the exhaust pipe attaches to the muffler.

Reject vehicle if:

- Not equipped with a muffler;
- Muffler or exhaust pipe has holes, loose joints or leaking seams. (Only patches made with an arc or acetylene weld will be permitted)
- Exhaust system components are not securely fastened
- Tailpipe is not securely fastened to the muffler
- A modified high rise tailpipe is positioned so it could easily burn the operator

Glazing (Glass).

If equipped with a windshield, it must provide a clear vision of the road ahead.

Reject vehicle:

- If the windshield is cracked, scarred or defaced to the extent that it does not provide a clear vision

Fuel System.

Inspect the fuel tank(s), fuel lines and connections and filler cap.

Reject vehicle if:

- There is fuel leakage at any location
- Fuel tank is not securely attached
- Filler cap is missing or does not fit

Air Pollution Control Devices.

Inspect all 1995 and later models for air pollution devices installed by the manufacturer.

Reject any vehicle if:

- Any part of the system(s) is missing, modified, disconnected, broken, bypassed or rendered inoperative in any way
- A replacement catalytic converter is not one approved by the United States Environmental Protection Agency
- A replacement engine is not equivalent to the certified configuration of the engine-chassis.

Vehicle Identification Number & Odometer Reading Verification (11 CSR 50-2.440)

The requirements in 11 CSR 50-2.010–11 CSR 50-2.130 are applicable to vehicles which require vehicle identification number (VIN)/odometer reading verification.

The inspection shall certify that the manufacturer's identification number for the vehicle has been inspected, that it is correctly displayed on the vehicle and shall certify the reading shown on the odometer at the time of inspection.

Verification of VINs and odometer readings shall be made by a licensed inspector/mechanic at a licensed inspection station. Verification of all vehicles may be conducted at Class A, B or D inspection stations. However, Class C stations may verify motorcycles only. The actual verification of VINs and odometer readings shall be made on the inspection station premises.

The statutory fee for a safety inspection of the specific motor vehicle may be charged for the VIN and odometer verification.

Examination Procedure.

Examine VIN and odometer reading as displayed on the motor vehicle.

Reject vehicle if VINs and plate appear altered or tampered with in any manner (pay special attention to rivets and plate to determine that they are correct as installed by the manufacturer).

Forms Procedure.

List the motor vehicle owner's name, street, city and county in the appropriate spaces on the MVI-2 form. If the VIN and odometer reading are correctly displayed, either write the words "ID/OD Verification" in large letters across the form in the space for defective part or check the applicable box on the MVI-2 form and enter "NONE" in the space for the sticker/decal number.

If the VIN appears to be incorrectly displayed in any manner, such as altered, forged, incorrectly attached or a substitute plate used, do not issue a verification, **instead call the patrol headquarters located in your area for immediate assistance.**

If a safety inspection is requested, this procedure is not required.

MILLIMETERS TO INCHES
1 Millimeter = 0.03937008 Inches

INCHES TO MILLIMETERS
1 Inch = 25.4 Millimeters

Millimeters	Inches	Millimeters	Inches	Inches	Millimeters	Inches	Millimeters
1	0.039	50	1.97	1	25.40	50	1270.00
2	0.079	51	2.01	2	50.80	51	1295.40
3	0.118	52	2.05	3	76.20	52	1320.80
4	0.157	53	2.09	4	101.60	53	1346.20
5	0.197	54	2.13	5	127.00	54	1371.60
6	0.236	55	2.17	6	152.40	55	1397.00
7	0.276	56	2.21	7	177.80	56	1422.40
8	0.315	57	2.24	8	203.20	57	1447.80
9	0.354	58	2.28	9	228.60	58	1473.20
10	0.394	59	2.32	10	254.00	59	1498.60
11	0.433	60	2.36	11	279.40	60	1524.00
12	0.472	61	2.40	12	304.80	61	1549.40
13	0.512	62	2.44	13	330.20	62	1574.80
14	0.551	63	2.48	14	355.60	63	1600.20
15	0.591	64	2.52	15	381.00	64	1625.60
16	0.630	65	2.56	16	406.40	65	1651.00
17	0.669	66	2.60	17	431.80	66	1676.40
18	0.709	67	2.64	18	457.20	67	1701.80
19	0.748	68	2.68	19	482.60	68	1727.20
20	0.787	69	2.72	20	508.00	69	1752.60
21	0.827	70	2.76	21	533.40	70	1778.00
22	0.866	71	2.80	22	558.80	71	1803.40
23	0.906	72	2.83	23	584.20	72	1828.80
24	0.945	73	2.87	24	609.60	73	1854.20
25	0.984	74	2.91	25	635.00	74	1879.60
26	1.024	75	2.95	26	660.40	75	1905.00
27	10.63	76	2.99	27	685.80	76	1930.40
28	1.102	77	3.03	28	711.20	77	1955.80
29	1.142	78	3.07	29	736.60	78	1981.20
30	1.181	79	3.11	30	762.00	79	2006.60
31	1.220	80	3.15	31	787.40	80	2032.00
32	1.260	81	3.19	32	812.80	81	2057.40
33	1.299	82	3.23	33	838.20	82	2082.80
34	1.339	83	3.28	34	863.60	83	2108.20
35	1.378	84	3.31	35	889.00	84	2133.60
36	1.417	85	3.35	36	914.40	85	2159.00
37	1.457	86	3.39	37	939.80	86	2184.40
38	1.496	87	3.43	38	965.20	87	2209.80
39	1.535	88	3.46	39	990.60	88	2235.20
40	1.575	89	3.50	40	1016.00	89	2260.60
41	1.614	90	3.54	41	1041.40	90	2286.00
42	1.654	91	3.58	42	1066.80	91	2311.40
43	1.693	92	3.62	43	1092.20	92	2336.80
44	1.732	93	3.66	44	1117.60	93	2362.20
45	1.772	94	3.70	45	1143.00	94	2387.60
46	1.811	95	3.74	46	1164.40	95	2413.00
47	1.850	96	3.78	47	1193.80	96	2438.80
48	1.890	97	3.82	48	1219.20	97	2463.80
49	1.929	98	3.86	49	1244.60	98	2489.20
50	1.969	99	3.90	50	1270.00	99	2514.60

COMMON FRACTIONS REDUCED TO DECIMALS

1/2'S	4THS	8THS	16THS	32NDS	64THS	
					1	0.015625
				1	2	0.03125
					3	0.046875
			1	2	4	0.0625
					5	0.078125
				3	6	0.09375
					7	0.109375
		1	2	4	8	0.125
					9	0.140625
				5	10	0.15625
					11	0.171875
			3	6	12	0.1875
					13	0.203125
				7	14	0.21875
					15	0.234375
	1	2	4	8	16	0.250
					17	0.265625
				9	18	0.28125
					19	0.296875
			5	10	20	0.3125
					21	0.328125
				11	22	0.34375
					23	0.359375
		3	6	12	24	0.375
					25	0.390625
				13	26	0.40625
					27	0.421875
			7	14	28	0.4375
					29	0.453125
				15	30	0.46875
					31	0.484375
1	2	4	8	16	32	0.500
					33	0.515625
				17	34	0.53125
					35	0.546875
			9	18	36	0.5625
					37	0.578125
				19	38	0.59375
					39	0.609375
		5	10	20	40	0.625
					41	0.640625
				21	42	0.65625
					43	0.671875
			11	22	44	0.6875
					45	0.703125
				23	46	0.71875
					47	0.734375
	3	6	12	24	48	0.750
					49	0.755625
				25	50	0.78125
					51	0.796875
			13	26	52	0.8125
					53	0.828125
				27	54	0.84375
					55	0.859375
		7	14	28	56	0.875
					57	0.890625
				29	58	0.90625
					59	0.921875
			15	30	60	0.9375
					61	0.953125
				31	62	0.96875
					63	0.984375
2	4	8	16	32	64	1.00

Questions regarding information contained in the Motor Vehicle Inspection Regulations manual should be addressed to the Motor Vehicle Inspection Section of the Driver and Vehicle Safety Division of the Missouri State Highway Patrol at (573) 526-6132, or by contacting the MVI office at your local troop headquarters.

Troop MVI Office - Telephone Numbers

Troop A - Lee's Summit
(816) 622-0717 Ext: 6138

Troop B - Macon
(660) 385-6674 Ext: 3236

Troop C - St. Louis
(314) 416-2180 Ext: 4357

Troop C - Park Hills
(573) 431-0166 Ext: 4325

Troop D - Springfield
(417) 895-6767 Ext: 3423

Troop D - Carthage
(417) 359-1505 Ext: 4567

Troop E - Poplar Bluff
(573) 840-9500 Ext: 3525

Troop E - Sikeston
(573) 472-5203 Ext: 6513

Troop F - Jefferson City
(573) 526-6262 Ext: 3677

Troop G - Willow Springs
(417) 469-3121 Ext: 3730

Troop H - St. Joseph
(816) 387-2345 Ext: 3846

Troop I - Rolla, MO
(573) 368-2221 Ext: 3968

MOTOR VEHICLE INSPECTION CHECKLIST

- **FILL OUT I.D. PORTION OF MVI-2 FORM**

- **OBTAIN VIN FROM VEHICLE**

- **DRIVE VEHICLE FOR BRAKE PERFORMANCE**

- **INTERIOR OF VEHICLE**
  - ✓ Steering Wheel Bind and Play
  - ✓ Brake Pedal Power-Brake Reserve
  - ✓ Brake Warning Light
  - ✓ Windshield Wiper Operation
  - ✓ Mirrors
  - ✓ Seat Belts - 1965 & Later *(Passenger Vehicles)*
  - ✓ Seat Belts - 1971 & Later *(Pickup Trucks)*
  - ✓ Horn
  - ✓ High Beam Indicator
  - ✓ Glazing (Glass)

- **OUTSIDE OF VEHICLE**
  - ✓ Wiper Blade Condition
  - ✓ Rear Lights
  - ✓ Signal & Brake Lights
  - ✓ Reflectors
  - ✓ Gas Filler Cap
  - ✓ Front Lights

- **BUMPERS**
  - ✓ ***Maximum Bumper Heights***

	Front	*Rear*
• Passenger Vehicles	22 in.	22 in.

  - ✓ ***Commercial Motor Vehicles Determined By Gross Vehicle Weight Rating (GVWR)***

	Front	*Rear*
• 4,500 lbs. and under	24 in.	26 in.
• 4,501 lbs. through 7,500 lbs.	27 in.	29 in.
• 7,501 lbs. through 9,000 lbs.	28 in.	30 in.
• 9,001 lbs. through 11,500 lbs.	29 in.	31 in.

- **UNDER HOOD**
  - ✓ Master Cylinder Unit
  - ✓ Power Steering Unit
  - ✓ Upper Control Arms
  - ✓ Steering Components (tie rods, steering box, strut mounting)

- **AIR POLLUTION DEVICES**
  - ✓ P.C.V. System
  - ✓ Air Injection
  - ✓ T.A.C. System
  - ✓ Spark Control
  - ✓ Exhaust Gas Recirculation
  - ✓ Oxygen Sensor
  - ✓ Evaporative Emissions System
  - ✓ Catalytic Converter

- **RAISE VEHICLE WITH BALL JOINTS IN "LOADED" POSITION**

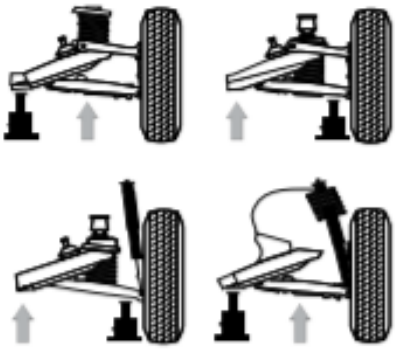

NOTE:
- *Arrows Indicate* Loaded Position.
- *Jacks Indicate* Position To Unload Ball Joints.

- **START ENGINE**
  - ✓ Exhaust System
  - ✓ Catalytic Converter(s)
  - ✓ Tires and Wheels
  - ✓ Wheel Bearings
  - ✓ Brake Lines & Hoses
  - ✓ Fuel System
  - ✓ Spring/Torsion Bar
  - ✓ Shock Absorbers
  - ✓ Front Wheel/King Pin Play
  - ✓ Tie Rod Ends (FRT/Rear)
  - ✓ Idler Arm
  - ✓ Pitman Arm
  - ✓ Stabilizer Links (FRT/Rear)
  - ✓ Lower Control Arms (FRT/Rear)
  - ✓ W. I. Type Ball Joints (FRT/Rear)

- **STOP ENGINE**

- **REMOVE WHEEL AND INSPECT BRAKE COMPONENTS**

- **RE-HOIST VEHICLE WITH BALL JOINTS IN "UNLOADED" POSITION TO INSPECT STANDARD BALL JOINTS**
  - ✓ Inspect McPherson Struts with ball joints unloaded

- **COMPLETE MVI-2 FORM**
- **REJECT OR APPROVAL**
- **COLLECT PROPER FEE**

MOTORCYCLE INSPECTION CHECKLIST

Fill out I.D. portion of MVI-2 Form

Obtain VIN from Vehicle

Drive or observe vehicle for brake performance

Inspect :

- ✔ for brake pedal height and reserve
- ✔ wheel and master cylinder for leakage
- ✔ master cylinder fluid level
- ✔ break hoses and rods or cables
- ✔ head light(s)
- ✔ beam indicator (if equipped)
- ✔ tail light(s) and reflectors
- ✔ stop light and turn signals if equipped
- ✔ horn
- ✔ frame, fork, steering head bearing, handle bars (including height), and front and rear wheel tracking
- ✔ wheel bearings and grease retainers
- ✔ front and rear shock absorbers
- ✔ tires, wheels, and rims
- ✔ exhaust system and muffler
- ✔ windshield (if equipped)
- ✔ fuel tank, filler cap, and fuel line connections

Complete MVI-2 Form

Approve or Reject.

Collect Proper Fee

SHP-511